Yanbu Journal of Engineering and Science

Volume 20 | Issue 1 Article 9

2023

DC motor control using model reference adaptive control

Mohamed I. Mosaad
Yanbu Industrial college, Saudi Arabia

Follow this and additional works at: https://yjes.researchcommons.org/yjes

The journal in which this article appears is hosted on Digital Commons, an Elsevier platform.

Recommended Citation

Mosaad, Mohamed I. (2023), DC motor control using model reference adaptive control, *Yanbu Journal of Engineering and Science*: Vol. 20: Iss. 1, 77-88.
DOI: https://doi.org/10.53370/001c.75401
Available at: https://yjes.researchcommons.org/yjes/vol20/iss1/9

This Research Article is brought to you for free and open access by Yanbu Journal of Engineering and Science. It has been accepted for inclusion in Yanbu Journal of Engineering and Science by an authorized editor of Yanbu Journal of Engineering and Science.

Mosaad MI. DC motor control using model reference adaptive control. *YJES.* 2023;20(1):77-88.
doi:10.53370/001c.75401

Research article

DC motor control using model reference adaptive control

Mohamed I. Mosaad, Ph.D[1]

[1] Electrical Engineering, Yanbu Industrial College

Keywords: DC motor, model reference adaptive controller, speed control, elephant herding optimization

https://doi.org/10.53370/001c.75401

Yanbu Journal of Engineering and Science

Vol. 20, Issue 1, 2023 Submitted: 10 FEB 2023 Revised: 03 MAR 2023 Accepted: 28 MAR 2023

Despite having higher maintenance costs than AC motors, DC motors had been widely employed in the industry due to their outstanding speed control capabilities. This employment increased due to the DC output of some renewable sources recently. This article introduces the speed control of DC motors using model reference adaptive control (MRAC). This control is achieved through regulating the armature voltage at different load changes. A comparison between the proposed adaptive controller and optimized PI controller using the elephant herding optimization (EHO) is presented. The PI controller parameters were optimality adjusted to minimize the integral absolute error, minimum overshoot, and minimum settling time. Computer simulations show that the suggested MRAC is preferable to a traditional optimized PI controller. In addition, the proposed controller is effective in regulating the DC motor over a broad range of operating speeds.

Nomenclature

ANN	Artificial neural network
ANFIS	Adaptive Neuorfuzzy inference system
D	damping constant
DVR	Dynamic voltage restorer
EHO	elephant herding optimization
FC	Fuel cell
i_a	armature current
J_a	motor inertia constant
K	back emf constant
K_m	Torque constant
K_b	Feedback constant
L_a	armature reactance
MPPT	Maximum power point tracking
MRAC	Model reference adaptive controller
MFAC	Model free adaptive controller
MPC	Model predictive control
PI	Proportional Integral
PV	photovoltaic
R_a	armature resistance
STATCOM	Static synchronous compensator
T_L	Load torque
UPFC	Unified power flow controller
V_t	terminal (supply) voltage
ω	rotor speed

I. INTRODUCTION

Due to their effectiveness and robustness, DC motors are widely employed in various industrial applications, particularly those that require accurate speed control including servo control and traction activities.[1–7] These motors are powered by a DC source, which is where the majority of renewable energy sources are produced. These sources are PV systems,[8] Fuel cell systems,[9] and some electrical generators in wind applications like permanent magnet synchronous machines[10] and switched reluctance machines.[11] PV-DC pumping systems are examples of uses for DC motors powered by renewable energy sources.[12] On the other hand, since these kinds of renewable sources were used to power the AC motors, DC-AC inverters had to be used.

DC motors are active ease in developing suitable feedback control systems, particularly those of the PI and PID types.[13–16] The possibilities for analyzing and redesigning existing in-use DC motor drive systems are greatly expanded by the expanding availability of feedback controller design methodologies and the quick development of circuit simulation software like Pspice and Matlab.[13–16] PI and PID controllers are the most applicable straightforward controllers with unlimited applications.[17–20] Despite, the features of PI and PID controllers, the adjustment of their parameters is a challenge. For the best tuning of these parameters, a variety of optimization approaches were used; some of them are listed in Table 1.

All the optimization techniques reported in Table 1 succeeded at optimal determining the PI controller parameters while minimizing/maximizing some objectives. They also succeed at improving the system performance based on the presented objectives. The optimal tuning and adjustment of such PI controllers have some drawbacks. These are the time taken during this optimization process, and the inability to update the controller parameter s they are static ones. Regarding the time taken for tuning, even if it is very small but still not adapted to the fast changes in the operating conditions application. That this tuning is performed off-line while the PI parameters need to be up-

Table 1. Optimization approach of PI controllers and applications

Optimization technique	Application
Genetic Algorithm	DC motor control[21] Direct torque control[22] Continuous stirred tank reactor control[23] STATCOM control[20]
Particle swarm	DC motor control[24] Control of STATCOM for wind energy system[25]
whale optimization algorithm	Speed control of DC motor[26] Control of STATCOM for hybrid power system[20]
Modified flower pollination algorithm	DC motor control[27] Ferroreonanace mitigation in wing energy systems[28] Connecting FC to the grid[9]
Harmony Search (HS)	DC motor control[29] Integrating FC into the electrical utility[9]
Electromagnetic Field Optimization	Integrating FC into the electrical utility[19]
Gray wolf	MPPT of wind systems[30]
Cuckoo Search	Control of DVR[31] MPPT of PV systems[32]
Elephant herding algorithm	Superconductor control for DFIG in wind applications LVRT support of wind systems[11]

To the knowledge of the author, the Elephant herding algorithm is not employed in tuning PI controller parameters for DC motor speed.

Table 2. Adaptive controller techniques and applications

Adaptive technique	Application
ANN	DC motor control[33] MPPT of PV systems[8] Switched-reluctance generator in wind energy systems[34] Restoring the balance of an unbalanced power system[35]
ANFIS	DC motor control[36] Wind applications[37] MPPT of PV system[8]
MPC	DC motor speed control[38] Industrial applications[39] Autonomous Ground Vehicles[40]
MFAC	DC motor control[38] UPFC[41] Weight control of cement steady flow[42]
adaptive backstepping	DC motor[43]
MRAC	Servo motor[44] STATCOM[25]

All the listed adaptive controllers surplus the classical PI controllers even the optimized ones.

dated online. While the inability to update the parameters based on the changing in the operating conditions is a big obstacle. This is clear in some motor applications when the load is changed. In addition, some changes in applications mainly depend on environmental conditions like solar temperatures and irradiance n PV applications and wind speed in wind applications. This opens the floor for using some other adaptive techniques. From which ANN, ANFIS, MRAC, MFAC, MPC and the environmental conditions. These applications are given in Table 2.

This paper will present an adaptive controller for the speed control of DC motor, MRAC. This adaptive controller is MRAC. A companion between this adaptive controller and the EHA-PI controller will be presented.

II. MATHEMATICAL MODEL OF THE DC MOTOR AND PROPOSED ALGORITHM

1. The motor dynamics can be described by the following equations[4]:

$$i_a\cdot = -\frac{R_a}{L_a}i_a - \frac{K}{L_a}\omega_r + \frac{1}{L_a}V_t \quad (1)$$

$$\omega_r\cdot = \frac{K}{J_a}i_a - \frac{D}{J_a}\omega_r - \frac{1}{J_a}T_L \quad (2)$$

The motor is sensed as a feedback control signal for speed control. This feedback is compared to the reference armature voltage as shown in Figure 1.

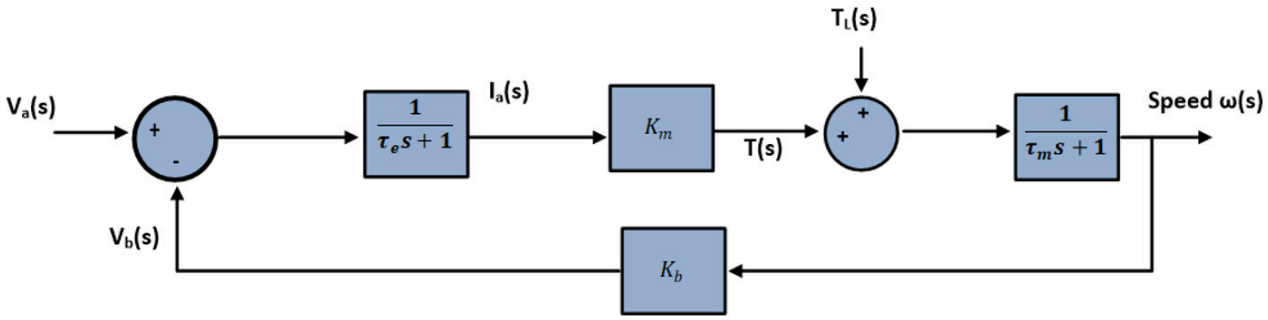

Fig. 1. Block diagram of DC motor

In general, the armature current and magnetic field intensity of a DC motor determine how much torque is produced. Since the magnetic field is assumed to remain constant in this paper, the motor torque is proportional to the armature current by a constantK_m, as:

$$T = K_m i \tag{3}$$

By a constant factorK_b, the back emf, is proportional to the shaft's angular velocity as

$$V_b = K_b \dot{\theta} \tag{4}$$

Since the motor torque and back emf constants are equivalent in SI units, we shall use the symbol k to denote both values.

Based on Kirchhoff's voltage law and Newton's second law, the following governing equations may be deduced based on Figure 1:

$$J\ddot{\theta} + \mathrm{b}\dot{\theta} = ki \tag{5}$$

$$L\frac{di}{dt} + Ri = V_a - k\dot{\theta} \tag{6}$$

The aforementioned modeling equations can be transferred by Laplace transform as

$$S(JS + B)\theta(s) = KI(s) \tag{7}$$

$$(LS + R)I(s) = V_a(s) - KS\theta(s) \tag{8}$$

Then the transfer function for the DC motor speed control based-armature voltage can be represented as:

$\frac{W(s)}{V_a(a)} = \frac{K}{(JS+B)(LS+R)+K^2}$

The stst-space representation of the DC motor equation can be described as[4–6]:

$$\frac{d}{d\theta}\begin{bmatrix}\dot{\theta}\\ i\end{bmatrix} = \begin{bmatrix}-\frac{b}{J} & \frac{K}{J}\\ -\frac{K}{L} & -\frac{R}{L}\end{bmatrix}\begin{bmatrix}\dot{\theta}\\ i\end{bmatrix} + \begin{bmatrix}0\\ \frac{1}{L}\end{bmatrix}V \tag{10}$$

$$y = \begin{bmatrix}1 & 0\end{bmatrix}\begin{bmatrix}\dot{\theta}\\ i\end{bmatrix} \tag{11}$$

The control block diagram is shown in Figure 2.

In this paper, MRAC will be used to regulate the speed of the motor. In addition, a comparison between this controller and a PI controller will be presented to test the effectiveness of the proposed adaptive controller. The parameters of the PI controller will be tuned using EHO.

This EHO will be used to minimize the integral of the sum of squares of errors between the armature and emf voltages in order to reach the target constant speed at load variations.

1. ELEPHANT HERDING OPTIMIZATION

The performance of the system is significantly impacted by the values of the PI controller parameters. If they were correctly determined the system's performance will improve noticeably. The main solutions for many applications are optimization techniques for the best tuning of PI control settings. For the best tuning of PI control parameters, one contemporary optimization approach is called EHO.[45,46]

In this article, EHO is used to lessen the objective function J, that is can be defined as:

$$J = \min \int (V_a - V_b)^2 \, dt \tag{12}$$

The input to the PI controller is the error signal between the two voltages. Which is a function of the EHO-PI control parameters.

EHO is essentially based on the following presumptions:

1. There are a fixed number of subgroups known as clans in the entire population of elephants, and each clan has a defined number of elephants.
2. Many elephants frequently abandon their clan and live alone.
3. Each clan operates under a matriarch's direction.

Assume there are H clans of elephants in total, with D elephants in each tribe. The position of ith elephant, i=1,2,3.....D in j^{th} clan, j =1,2.....H, is represented as $X_{i,j}$. The position of every elephant, excluding the mother, has been updated as:

$$x'_{i,j} = x_{i,j} + \rho\,(x_{best,j} - x_{i,j})r \tag{13}$$

Such that ρ is a scaling factor and r is a random number. ρ and r are between 0 and 1.

The following updates the matriarch location:

$$x_{best,j} = \mu\, x_{center,j} \tag{14}$$

Such that μ is a scaling factor between 0, 1 and $x_{center,j}$ is the average of the positions of all elephants.

$$x_{center,j} = \frac{1}{D}\sum_{j=1}^{D} x_{i,j} \tag{15}$$

The male elephant departs the clans in the poorest possible position, as indicated by the modified notation $x_{worest,j}$:

$$x_{worest,j} = x_{\min} + r(x_{\max} - x_{\min} + 1) \tag{16}$$

The same process is carried out until the termination requirement is met. The flow chart of EHO is shown in Figure

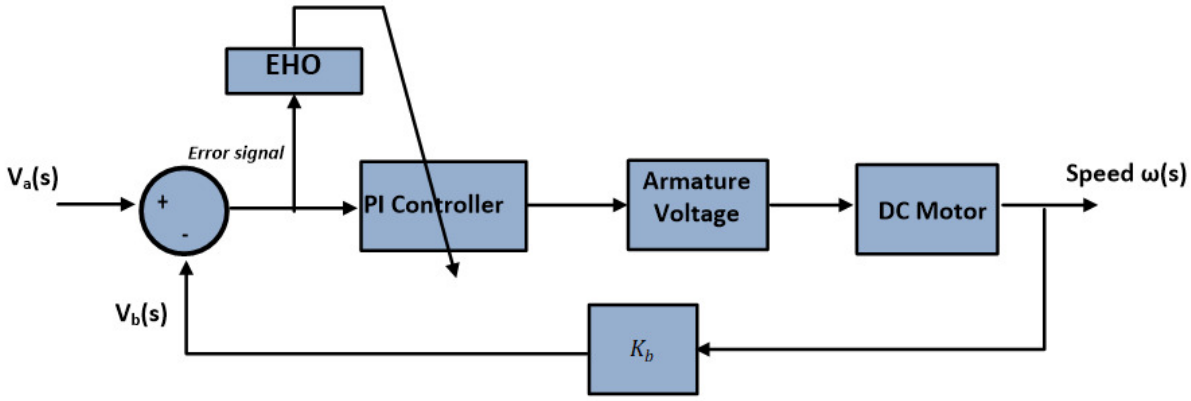

Fig. 2. Control system using EHO-PI

3. While the convergence of this objective function for 150 iterations is shown in Figure 4.

2. MODEL REFERENCE ADAPTIVE CONTROL

At specific operating circumstances, the PI control parameters acquired from EHO are calculated. To achieve the ideal value for the objective function, the control parameters must be updated (retuned) in response to any change in the operating conditions. In other words, the PI controller however optimal tunning is tuned at certain operating conditions. The tuned PI controllers could not be implemented online because this tuning takes a long time. Moreover, switching the operating point from the optimized one does not guarantee optimality. Adaptive control techniques must be used to address these PI controller limitations, although they are more complex and expensive than PI controllers. These adaptive techniques surpluses the PI controllers as summarized in Table 2.

This work employs MRAC-based MIT adaptive mechanism.[47,48]

The foundation of MRAC is the development of a closed-loop controller with updated parameters to accommodate the system's response. In the DC motor speed control system, a reference model should respond as expected, V_{model}. When there is a disturbance, you prefer the system to provide this desired response. The control settings are updated based on this variable error as the system output, V_{out}, is monitored and compared to the expected response.[25] The MRAC is depicted in Figure 5.

V. SIMULATION RESULTS

The proposed MRAC presented in this paper is applied to a DC motor of these parameters[49]:

$P = 5\ \text{kW}$, $V_t = 220\ \text{V}$, $N = 1500\text{rpm}$, $R_a = 0.5\Omega$,
$L_a = 14\text{mH}$, $J_a = 0.15\ \text{kg}\cdot\text{m}^2$, $K = 1.4$, $D = 0.01\text{Nm.s}$

The steady-state operation of the DC motor will be investigated initially and the motor speed is selected to be

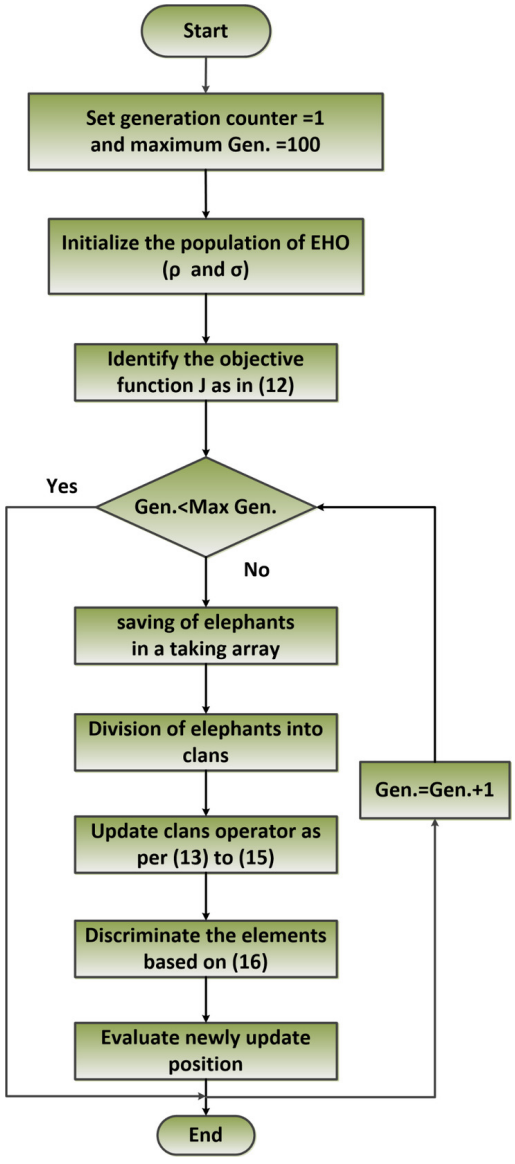

Fig. 3. Flow chart of EHO

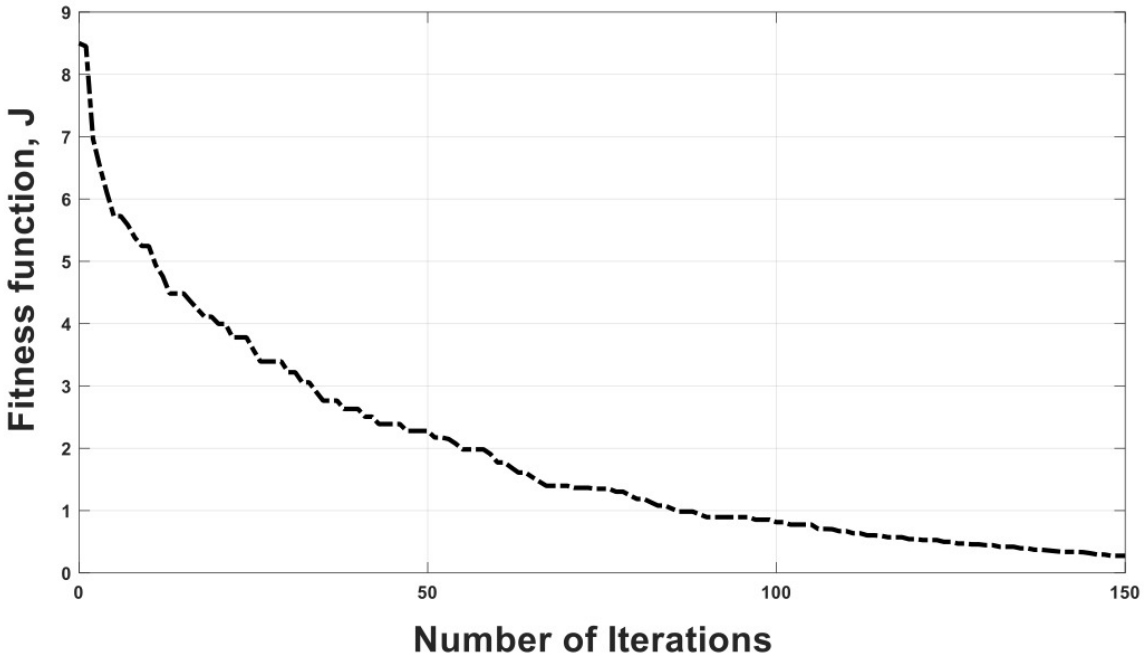

Fig. 4. Convergence of the objective function using EHO

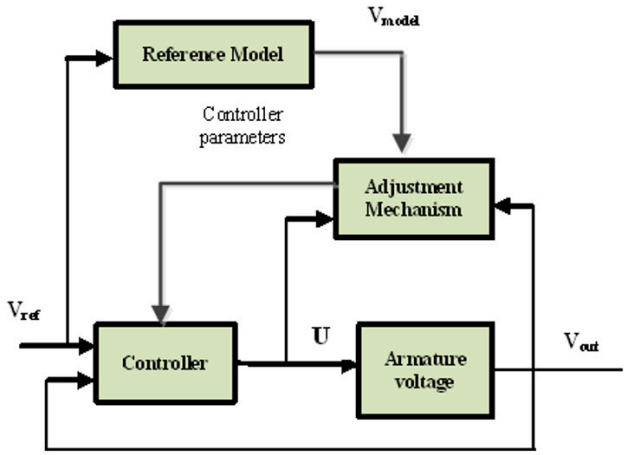

Fig. 5. Control system using MRAC

constant at 1500 rpm. The motor reached at this selected speed by both EHO-PI controller and MRAC successfully with faster reaching when applying MRAF as depicted in Figure 6. The armature current profile in this steady-state operation is improved with less overshoot when using MFAC over EHO-PI controller as given in Figure 7.

TEST CASE 1: LOAD TORQUE VARIATION

The load torque is increased by 25% at 1 s in this case suddenly to demonstrate the efficacy of the suggested approaches to control the motor speed. A sudden decrease in the speed has occurred at t=1 s when the load torque is increased. This decrease is more is less when applying MRAC over EHO-PI controller as in Figure 8. When adopting MRAC, as shown in Figure 9, the armature current rose at the same time as the torque increased with superior performance. When the load torque increased, the speed performance when utilizing MRAC improved at a quick rate of change in the controlled armature voltage as shown in Figure 10.

TEST CASE 2: REFERENCE SPEED VARIATION

An additional test case will be presented to evaluate the viability of the suggested speed controller for monitoring speed changes. In this case, the reference speed is increased from 1500 rpm to 1800 rpm at t=1 s. Both the controllers EHO-PI and MRAC successed at reaching the target speed. While the MRAC reached faster as shown in Figure 11. The armature controller voltage noticeably rises when the reference speed increases, as shown in Figure 12, despite the planned EHO-PI controller's ability to track the reference speed which may harm the motor. However, the MRAC did not experience this growth.

VI. CONCLUSIONS

This work presents an adaptive model reference controller for DC motor speed control. This controller works by adjusting the armature voltage. By achieving the steady state value more quickly, the suggested adaptive controller enhances the motor speed profile during steady state operation. Two test scenarios, involving variations in the load torque and reference speed, were used to examine the performance of the adaptive controller. The MRAC succeeded to regulate the target speed in the two scenarios. In addition, the suggested adaptive controller is contrasted with

the EHO-optimized PI controller. Which showed the superiority of the adaptive controller over the EHO-PI controller.

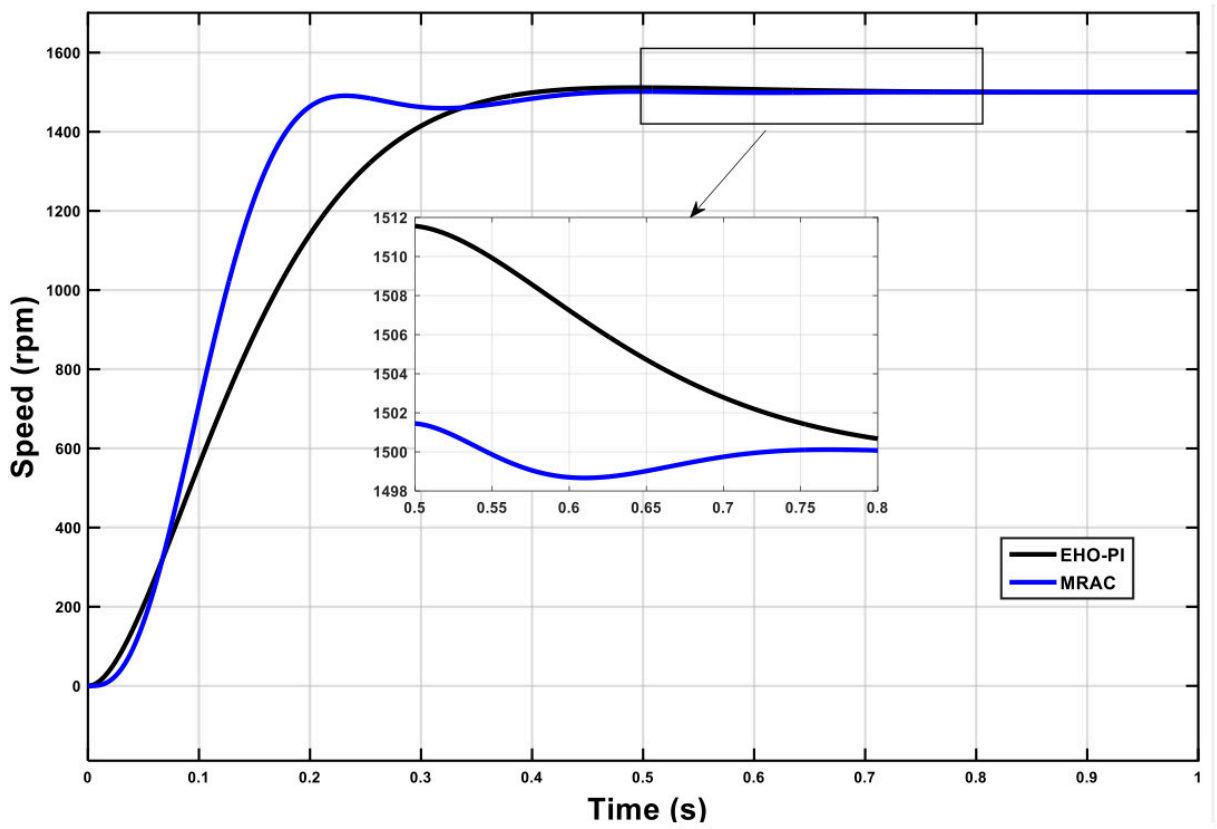

Fig. 6. Motor speed at steady state

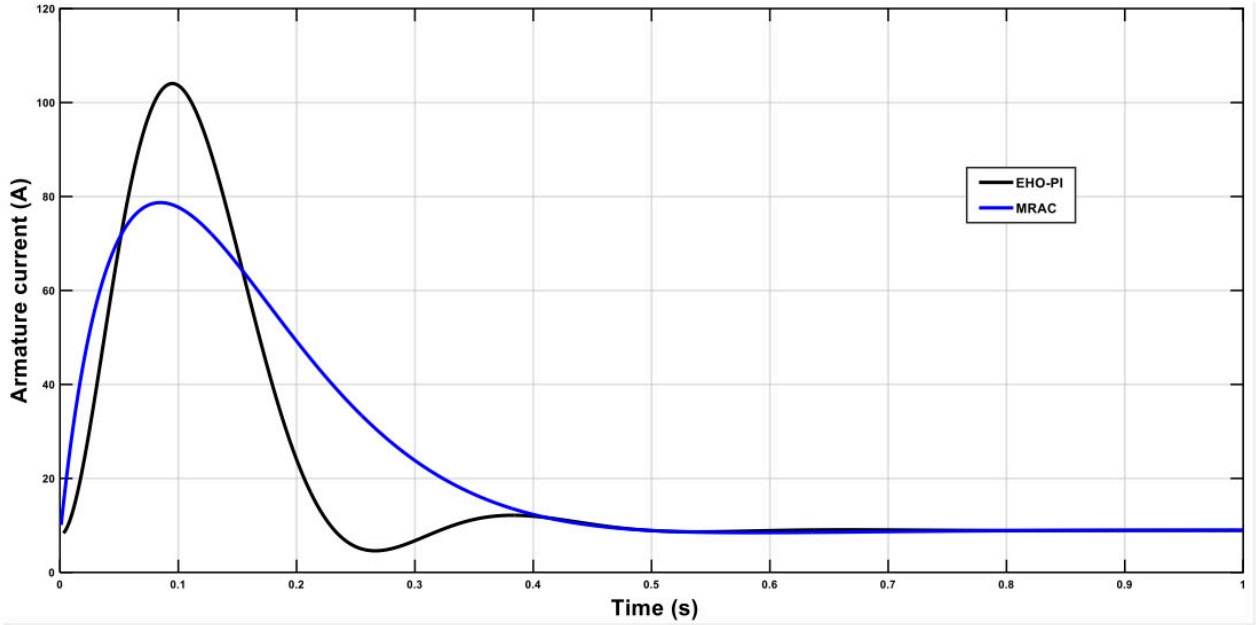

Fig. 7. Armature current at steady state

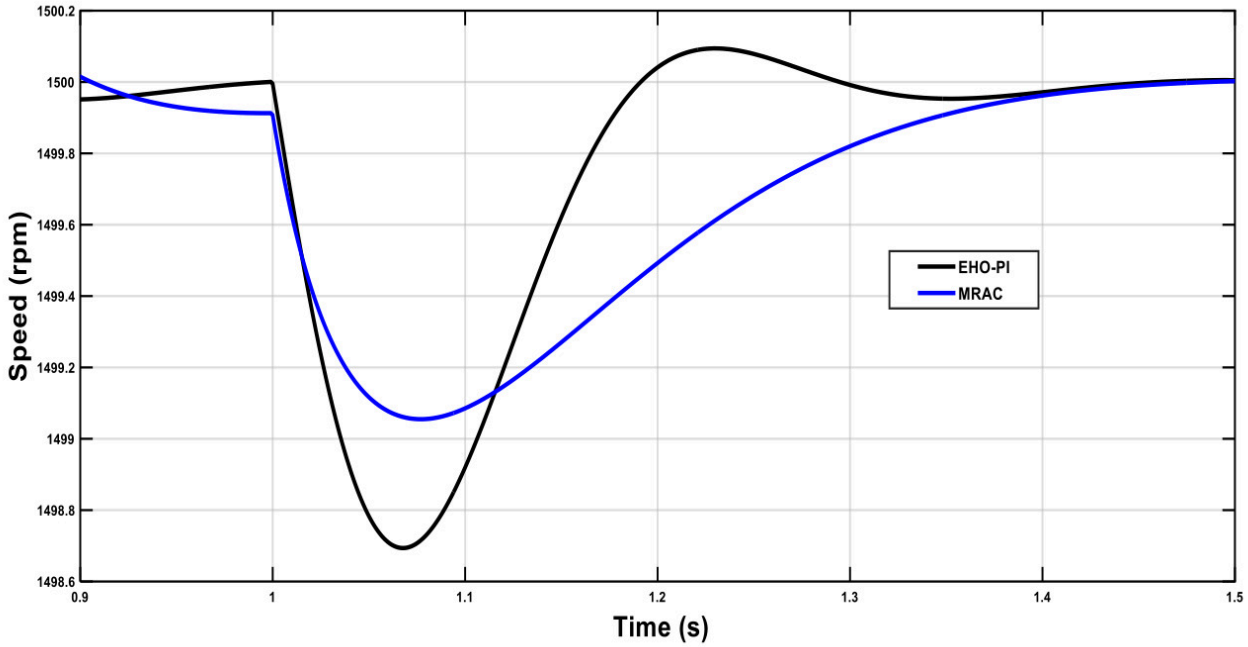

Fig. 8. Motor speed at a step change in the load torque

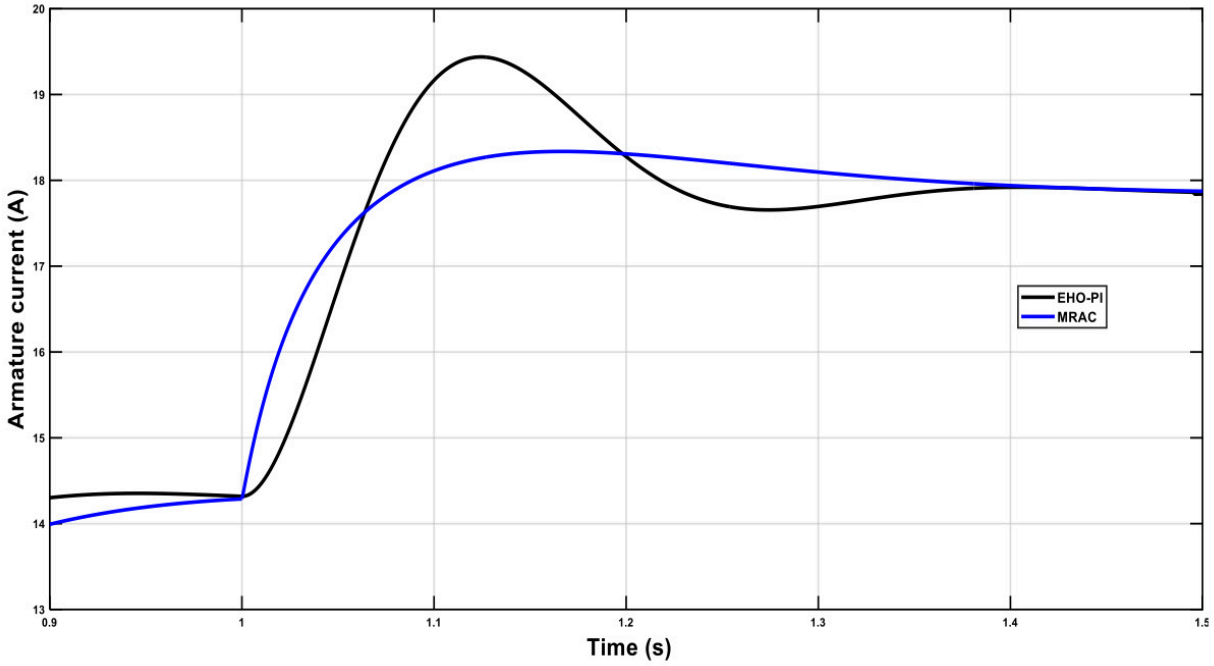

Fig. 9. Armature current at a step change in the load torque

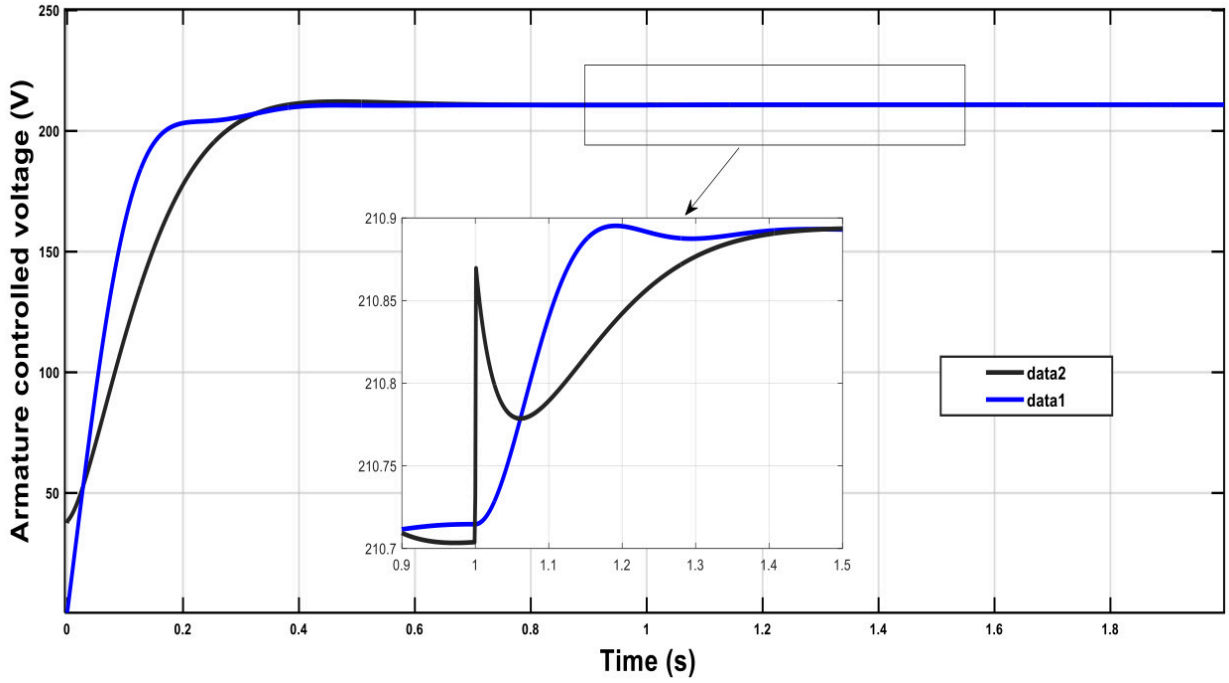

Fig. 10. Armature voltage at a step change in the load torque

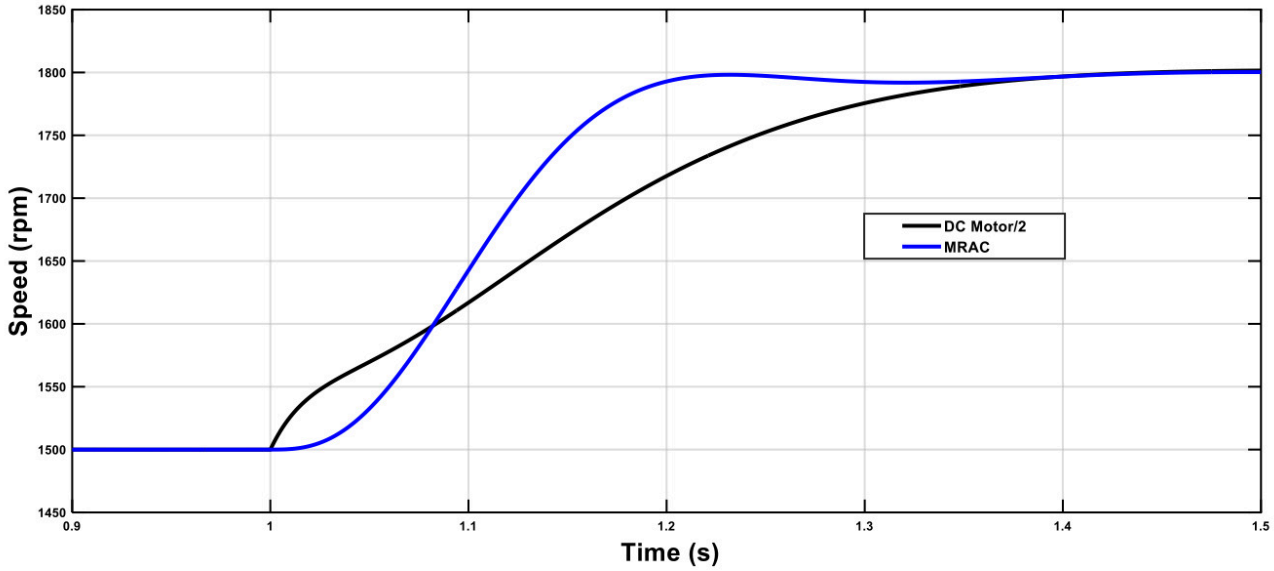

Fig. 11. Motor speed at reference speed change

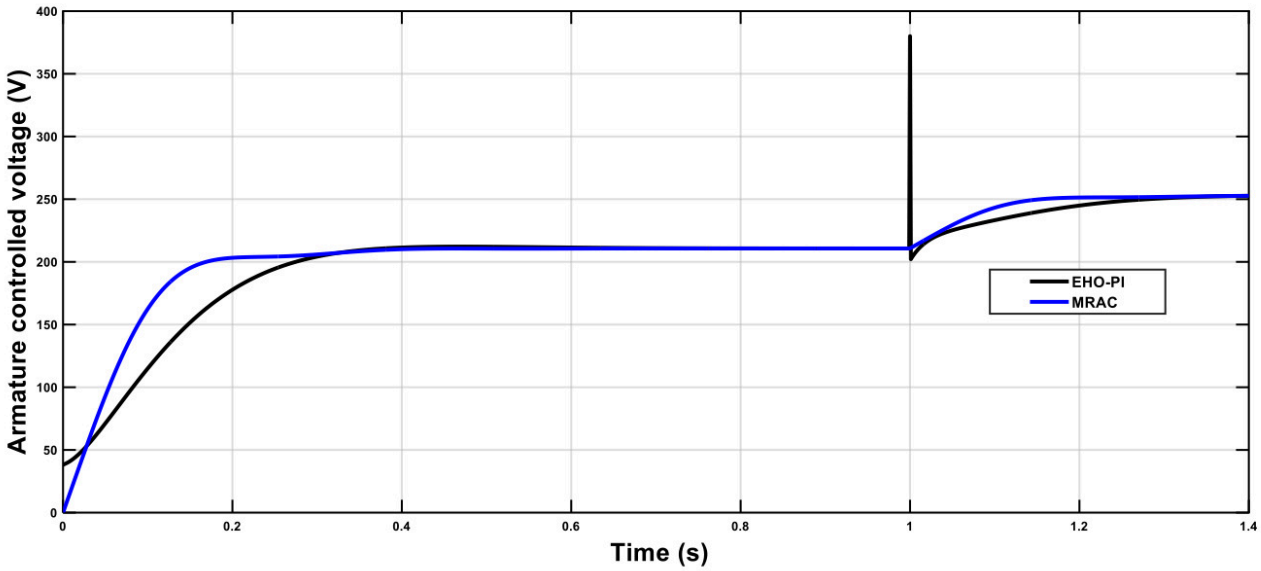

Fig. 12. Armature voltage at reference speed change

This is an open-access article distributed under the terms of the Creative Commons Attribution 4.0 International License (CCBY-4.0). View this license's legal deed at http://creativecommons.org/licenses/by/4.0 and legal code at http://creativecommons.org/licenses/by/4.0/legalcode for more information.

REFERENCES

1. Jahmeerbacus MI, Oolun MK, Bhurtun C, Soyjaudah KMS. Speed Sensorless Control of a Converter-fed DC Motor". *IEEE Trans on Ind Elect*. 1996;43(4):492-497,.

2. Lyshevski SE. *Electromechanical Systems, Electric Machines, and Applied Mechatronics*. CRC Press; 2000.

3. Millán AJ, Giménez de Guzmán MI, Guzmán VM, Torres M. A Close Loop DC Motor Speed Control Simulation System Using Spice". In: *IEEE International Caracas Conference on Devices, Circuits and Systems*. IEEE; 1995:261-265.

4. Rashid MH. *Spice for Power Electronics and Electric Power*. Prentice Hall, Inc; 1993.

5. Ortega R, Loría A, Nicklasson PJ, Sira-Ramírez H. *Passivity-Based Control of Euler-Lagrange Systems*. Springer London; 1998. doi:10.1007/978-1-4471-3603-3

6. Rahman MF, Patterson D, Cheok A, Betts R. *Motor Drives*. Power Electronics Handbook, Academic Press; 2001.

7. Sira-Ramirez H, Perez-Moreno RA, Ortega R, Garcia-Esteban M. Passivity-based controllers for the stabilization of DC-to-DC Power converters. *Automatica*. 1997;33(4):499-513. doi:10.1016/s0005-1098(96)00207-5

8. Banakhr FA, Mosaad MI. High performance adaptive maximum power point tracking technique for off-grid photovoltaic systems. *Sci Rep*. 2021;11(1):20400. doi:10.1038/s41598-021-99949-8

9. Ramadan HS, Padmanaban S, Mosaad MI. Metaheuristic-based Near-Optimal Fractional Order PI Controller for On-grid Fuel Cell Dynamic Performance Enhancement. *Electric Power Systems Research*. 2022;208:107897. doi:10.1016/j.epsr.2022.107897

10. Jia Y, Du Y, Wang Y, et al. Finite Element Simulation on Irreversible Demagnetization of Permanent Magnet Synchronous Generator. In: *2022 9th International Conference on Condition Monitoring and Diagnosis (CMD)*. ; 2022:408-412,. doi:10.23919/cmd54214.2022.9991602

11. Chojaa H, Derouich A, Taoussi M, et al. Nonlinear Control Strategies for Enhancing the Performance of DFIG-Based WECS under a Real Wind Profile. *Energies*. 2022;15(18):6650. https://doi.org/10.3390/en15186650

12. Altimania MR, Elsonbaty NA, Enany MA, et al. Optimal Performance of Photovoltaic-Powered Water Pumping System. *Mathematics*. 2023;11(3):731. doi:10.3390/math11030731

13. Bansal UK, Narvey R. Speed control of DC motor using fuzzy PID controller. *Advance in Electronic and Electric Engineering*. 2013;3(9):1209-1220.

14. El-Gammal AAA, El-Samahy AA. A modified design of PID controller for DC motor drives using Particle Swarm Optimization PSO. In: *2009 International Conference on Power Engineering, Energy and Electrical Drives*. IEEE; 2009. doi:10.1109/powereng.2009.4915157

15. Chen H, Li J, Zhou X. PSO-based self-tuning PI control for STATCOM. *Proceedings of The 7th International Power Electronics and Motion Control Conference*. 2012;(4):2710-2715. doi:10.1109/ipemc.2012.6259291

16. Kanojiya RG, Meshram PM. Optimal tuning of PI controller for speed control of DC motor drive using particle swarm optimization. In: *2012 International Conference on Advances in Power Conversion and Energy Technologies (APCET), Mylavaram, India*. ; 2012:1-6,. doi:10.1109/apcet.2012.6302000

17. Mosaad MI, Ramadan HSM, Aljohani M, El-Naggar MF, Ghoneim SSM. Near-Optimal PI Controllers of STATCOM for Efficient Hybrid Renewable Power System. *IEEE Access*. 2021;9:34119-34130. doi:10.1109/access.2021.3058081

18. El-Naggar MF, Mosaad MI, Hasanien HM, AbdulFattah TA, Bendary AF. Elephant herding algorithm-based optimal PI controller for LVRT enhancement of wind energy conversion systems. *Ain Shams Engineering Journal*. 2021;12(1):599-608. doi:10.1016/j.asej.2020.07.013

19. Mosaad MI, Ramadan HS. Power quality enhancement of grid-connected fuel cell using evolutionary computing techniques. *International Journal of Hydrogen Energy*. 2018;43(25):11568-11582. doi:10.1016/j.ijhydene.2018.02.001

20. Mosaad MI, Sabiha NA. Ferroresonance Overvoltage Mitigation Using STATCOM for Grid-connected Wind Energy Conversion Systems. *Journal of Modern Power Systems and Clean Energy*. 2022;10(2):407-415. doi:10.35833/mpce.2020.000286

21. Chen GY, Perng JW. PI speed controller design based on GA with time delay for BLDC motor using DSP. In: *2017 IEEE International Conference on Mechatronics and Automation (ICMA)*. IEEE; 2017:1174-1179. doi:10.1109/icma.2017.8015983

22. Naresh B, Vijaya Kumar M, Smieee NY. GA based tuning of PI controller. *2011 IEEE Recent Advances in Intelligent Computational Systems*. Published online September 2011:321-325,. doi:10.1109/raics.2011.6069327

23. Jayachitra A, Vinodha R. Genetic Algorithm Based PID Controller Tuning Approach for Continuous Stirred Tank Reactor. *Adv Artif Intell*. 2014;2014(791230):1-8. doi:10.1155/2014/791230

24. El-Gammal AAA, El-Samahy AA. A modified design of PID controller for DC motor drives using Particle Swarm Optimization PSO. *2009 International Conference on Power Engineering, Energy and Electrical Drives*. Published online March 2009. doi:10.1109/powereng.2009.4915157

25. Mosaad MI. Model reference adaptive control of STATCOM for grid integration of wind energy systems. *IET Electric Power Applications*. 2018;12(5):605-613. doi:10.1049/iet-epa.2017.0662

26. Razmjooy N, Vahedi Z, Estrela VV, Padilha R, Monteiro ACB. *Speed Control of a DC Motor Using PID Controller Based on Improved Whale Optimization Algorithm Metaheuristics and Optimization in Computer and Electrical Engineering*. Vol 696.; 2021.

27. Mahmud M, Motakabber SMA, Alam AHMZ, Nordin AN. Utilizing of Flower Pollination Algorithm for Brushless DC Motor Speed Controller. *2020 Emerging Technology in Computing, Communication and Electronics (ETCCE)*. Published online December 21, 2020:1-5,. doi:10.1109/etcce51779.2020.9350866

28. Mosaad MI, Sabiha NA, Abu-Siada A, Taha IBM. Application of Superconductors to Suppress Ferroresonance Overvoltage in DFIG-WECS. *IEEE Trans Energy Convers*. 2022;37(2):766-777. doi:10.1109/tec.2021.3126602

29. Kumar M, Chaursiya K. Position control of brushless DC motor using harmony search algorithm optimization technique. *2017 International conference of Electronics, Communication and Aerospace Technology (ICECA)*. Published online April 2017:754-757,. doi:10.1109/iceca.2017.8203644

30. Yang B, Zhang X, Yu T, Shu H, Fang Z. Grouped grey wolf optimizer for maximum power point tracking of doubly-fed induction generator based wind turbine. *Energy Convers Manag*. 2017;133:427e43.

31. Hassanein WS, Ahmed MM, Osama abed el-Raouf M, Ashmawy MG, Mosaad MI. Performance improvement of off-grid hybrid renewable energy system using dynamic voltage restorer. *Alexandria Engineering Journal*. 2020;59(3):1567-1581. doi:10.1016/j.aej.2020.03.037

32. El-Raouf MO a., Mosaad MI, Mallawany Adel, Al-Ahmar MA, Bendary FME. MPPT of PV-Wind-Fuel Cell of Off-Grid Hybrid System for a New Community. *2018 Twentieth International Middle East Power Systems Conference (MEPCON)*. Published online December 2018:480-487,. doi:10.1109/mepcon.2018.8635165

33. Mahmood ZS, Nasret AN, Mahmood OT. Separately excited DC motor speed using ANN neural network. *AIP Conference Proceedings*. 2021;2404(080012). doi:10.1063/5.0068893

34. Mosaad MI, Elkalashy NI, Ashmawy MG. Integrating adaptive control of renewable distributed Switched Reluctance Generation and feeder protection coordination. *Electric Power Systems Research*. 2018;154:452-462. doi:10.1016/j.epsr.2017.09.017

35. El Metwally MM, El Emary AA, El Bendary FM, Mosaad MI. Using FACTS Controllers to Balance Distribution System Based ANN. In: *International Middle East Power System Conference, MEPCON 2006*. ; :81-86.

36. Pavankumar S vsr, Krishnaveni S, Venugopal Y, Babu YK. A neuro-fuzzy based speed control of separately excited dc motor. In: *2010 International Conference on Computational Intelligence and Communication Networks*. IEEE; 2010:93-98.

37. Chojaa H, Derouich A, Zamzoum O, et al. A Novel DPC Approach for DFIG-Based Variable Speed Wind Power Systems Using DSpace. *IEEE Access*. 2023;11:9493-9510. doi:10.1109/access.2023.3237511

38. Dani S, Sonawane D, Ingole D, Patil S. Performance evaluation of PID, LQR and MPC for DC motor speed control. *2017 2nd International Conference for Convergence in Technology (I2CT)*. Published online April 2017:348-354. doi:10.1109/i2ct.2017.8226149

39. Salem F, Mosaad MI. A Comparison Between MPC and Optimal PID Controllers: Case Studies. *Michael Faraday IET International Summit 2015*. Published online 2015:59-65. doi:10.1049/cp.2015.1607

40. Oyelere SS. The Application of Model Predictive Control (MPC) to Fast Systems such as Autonomous Ground Vehicles (AGV). *IOSR Journal of Computer Engineering*. 2014;16(3):27-37. doi:10.9790/0661-16342737

41. Mosaad MI, Alenany A, Abu-Siada A. Enhancing the performance of wind energy conversion systems using unified power flow controller. *IET Generation, Transmission & Distribution*. 2020;14(10):1922-1929. doi:10.1049/iet-gtd.2019.1112

42. Chuanchao Z, Qiang Z. Application of MFAC method to the weight control of cement steady flow bin. *2021 36th Youth Academic Annual Conference of Chinese Association of Automation (YAC)*. Published online May 28, 2021:168-172. doi:10.1109/yac53711.2021.9486482

43. Roy TK, Paul LC, Sarkar MI, Pervej MF, Tumpa FK. Adaptive controller design for speed control of DC motors driven by a DC-DC buck converter. *2017 International Conference on Electrical, Computer and Communication Engineering (ECCE)*. Published online February 2017:100-105. doi:10.1109/ecace.2017.7912888

44. Ehsani MS. Adaptive Control of Servo Motor by MRAC Method. *2007 IEEE Vehicle Power and Propulsion Conference*. Published online September 2007:78-83. doi:10.1109/vppc.2007.4544102

45. Wang GG, Deb S, Coelho L d. S. Elephant herding optimization. In: *2015 3rd International Symposium on Computational and Business Intelligence (ISCBI)*. ; 2015:1-5. doi:10.1109/iscbi.2015.8

46. Singh SP, Prakash T, Singh VP. Coordinated tuning of controller-parameters using symbiotic organisms search algorithm for frequency regulation of multi-area wind integrated power system. *Engineering Science and Technology, an International Journal*. 2020;23(1):240-252.

47. Swarnkar P, Jain S, Nema RK. Effect of adaptation gain on system performance for model reference adaptive control scheme using MIT rule. *Eng Technol Appl Sci Res*. 2011;1(3):70-75. doi:10.48084/etasr.11

48. Khanna R, Zhang Q, Stanchina WE, Reed GF, Mao ZH. Maximum Power Point Tracking Using Model Reference Adaptive Control. *IEEE Trans Power Electron*. 2014;29(3):1490-1499. doi:10.1109/tpel.2013.2263154

49. Salam F, Mosaad MI. DC motor Drive Control Using Fuzzy PD+I Controller based GA Tuning. *Yanbu Journal for Science and Technology*. 2018;15:39-48.