Yanbu Journal of Engineering and Science

Volume 22 | Issue 2 Article 9

2025

Experimental Study of Micro Thermoelectric Cooler Module

Mohammed Dhannoon
Department of Mechanical and Aerospace Engineering, Western Michigan University, Kalamazoo, MI 49008-5343, USA

Hassan Fagehi
Department of Mechanical Engineering, College of Engineering and Computer Sciences, Jazan University, Jazan 45142, Saudi Arabia, hfagehi@jazanu.edu.sa

Follow this and additional works at: https://yjes.researchcommons.org/yjes

The journal in which this article appears is hosted on Digital Commons, an Elsevier platform.

Recommended Citation

Dhannoon, Mohammed and Fagehi, Hassan (2025), Experimental Study of Micro Thermoelectric Cooler Module, *Yanbu Journal of Engineering and Science*: Vol. 22: Iss. 2, 100-110.
DOI: https://doi.org/10.53370/1658-5321.1206
Available at: https://yjes.researchcommons.org/yjes/vol22/iss2/9

This Research Article is brought to you for free and open access by Yanbu Journal of Engineering and Science. It has been accepted for inclusion in Yanbu Journal of Engineering and Science by an authorized editor of Yanbu Journal of Engineering and Science.

YANBU JOURNAL OF ENGINEERING AND SCIENCE 2025;22:100–110

Scan the QR to view the full-text article on the journal website

RESEARCH ARTICLE

Experimental Study of Micro Thermoelectric Cooler Module

Mohammed Dhannoon [a], **Hassan Fagehi** [b,*]

[a] Department of Mechanical and Aerospace Engineering, Western Michigan University, Kalamazoo, MI 49008-5343, USA
[b] Department of Mechanical Engineering, College of Engineering and Computer Sciences, Jazan University, Jazan 45142, Saudi Arabia

ABSTRACT

Micro thermoelectric cooler (μTEC) modules have recently attracted significant attention due to their compact size, effective heat dissipation, and rapid thermal response. These characteristics make them highly suitable for applications in electronics, telecommunications, and healthcare. The present study focuses on evaluating the cooling performance of a μTEC module under varying operating conditions. A comprehensive experimental setup was developed to measure critical parameters such as temperature difference, cooling capacity, and coefficient of performance (COP). Experimental results were compared with theoretical predictions, revealing a strong correlation, particularly at lower temperature differences and moderate current levels. However, deviations were observed at higher currents, primarily attributed to increased Joule heating and contact resistance. Overall, the agreement between experimental data and the theoretical model supports its validity while also highlighting areas for potential refinement. The findings contribute to a deeper understanding of μTEC efficiency and support future enhancements in thermoelectric cooling system design.

Keywords: Micro thermoelectric cooler module, Experimental study, Cooling power

1. Introduction

The field of thermoelectrics is advancing quickly, bringing with it a wave of innovative applications. Among the most promising technologies are micro thermoelectric coolers (μTECs), which have proven particularly useful in telecommunications thanks to their compact size, fast response time, and effective cooling capabilities. This was highlighted in the work of Bottner and colleagues back in 2004. On a similar note, micro thermoelectric generators (μTEGs) are making a strong impact in low-power devices such as hearing aids and wristwatches. Their tiny footprint and ability to operate with minimal power input make them ideal for portable and wearable electronics. In fact, these micro devices have become essential not only in consumer electronics but also in medical devices and microprocessor cooling—a point emphasized by Attar in 2015. One of the key strengths of these micro thermoelectric devices is their ability to target and manage heat in very small areas, often referred to as “hot spots.” This makes them highly effective in enhancing cooling solutions for modern electronics, including applications like air conditioning and refrigeration, as discussed by Zhu and others in 2013 [1, 5]. Their compactness, combined with high cooling power density, makes them far more efficient than traditional bulk materials. That said, miniaturizing thermoelectric devices isn’t without its challenges. As the components shrink—typically down to lengths between 0.01 mm and 0.06 mm—issues like electrical contact resistance and thermal resistance become much more pronounced. These interface problems can severely limit performance, and researchers like Semenyuk [6, 7] have pointed out that improving efficiency at this scale remains a tough engineering problem. Research into these micro thermoelectric devices has been ongoing for decades. One

Received 31 May 2025; accepted 3 September 2025.
Available online 18 September 2025

* Corresponding author.
E-mail address: hfagehi@jazanu.edu.sa (H. Fagehi).

https://doi.org/10.53370/1658-5321.1206
1658-5321/© 2025 The Author(s). Yanbu Journal of Engineering and Science. This is an open access article under the CC BY 4.0 Licence (https://creativecommons.org/licenses/by/4.0/).
Published by Yanbu Industrial College, Saudi Arabia. The journal is hosted on Digital Commons, an Elsevier Platform.

of the earliest and most influential contributions came from Semenyuk in 2002, who introduced a μTEC module composed of seven thermoelectric units at an international thermoelectrics conference. His work explored the temperature drops and power densities that could be achieved using various ceramic plate materials. Notably, a module with aluminum nitride (AlN) plates and 0.2 mm-long elements achieved a power density of 80 W/cm^2 and a maximum temperature difference of 70 K. Semenyuk expanded on this in a 2006 study, examining μTEC modules with even shorter elements. When the thermoelement length was reduced to 0.13 mm, the module achieved an impressive 110 W/cm^2 at the cold junction, with a temperature difference of 64 K. Other researchers have also explored the impact of thermoelement geometry. Min and Rowe [8] developed and validated a theoretical model using a single thermoelectric couple. Their experiments with three commercial modules showed that reducing thermoelement length by 55% led to a 48% increase in power output—while keeping the cold side at ambient temperature. In one notable example, shortening the length from 2.54 mm to 0.5 mm resulted in a 75% boost in power. Still, shorter elements can come with drawbacks. A study by Gomez and colleagues [9] found that contact resistance plays a much more significant role as element length decreases. When thermoelements were shortened below 1.0 mm, efficiency dropped considerably due to increased resistance at the contacts. In another study, Semeniouk and Fleurial [10] looked into how different substrate materials affect μTEC cooling performance. Their work with a micromodule using 0.2 mm-long thermoelements and diamond substrates showed a temperature difference of 67 K and cooling power of 12 W at the cold junction—highlighting how material choice can greatly influence outcomes. Finally, Zhu and colleagues [3] conducted an analytical study to determine the ideal thermoelement length for integrated μTECs. They concluded that the sweet spot for achieving the best temperature difference, cooling capacity, and overall performance lies between 0.1 mm and 0.2 mm. To better understand how to design and optimize micro thermoelectric devices, many researchers have turned to simulation tools—particularly finite element analysis (FEA). These studies have looked closely at how μTECs perform under different operating conditions and configurations, paying special attention to factors like operating current, the length-to-area ratio of thermoelements, and overall device dimensions. The findings consistently show that reducing the size of μTECs can significantly improve their cooling performance. Adjusting the geometry of the device has also proven to be a practical and effective way to boost efficiency. Numerical investigations by Pérez-Aparicio et al. [11] and Lee et al. [12] examined how both thermoelectric and electrical material properties influence cooling efficiency. Their work provides valuable insights into the design and optimization of μTEC systems. Other researchers, including Kim et al. [13] and Wu et al. [14], explored the impact of thermoelement thickness and the width-to-depth ratio on device performance, offering further guidance on how geometry plays a critical role. Additionally, Chen et al. [15] analyzed how the Thomson effect influences thermoelectric cooler (TEC) performance, contributing to a more complete understanding of the underlying physical processes. Goncalves and colleagues [16] combined theoretical modeling with FEA simulations to evaluate the initial performance of an on-chip μTEC. Their efforts yielded a temperature difference of 15 K, showcasing the feasibility of integrating such devices into compact systems. Together, these studies underline how essential both material selection and thoughtful design are to the advancement of thermoelectric cooling technology. A large body of research has focused on shrinking the size of thermoelectric devices to achieve higher power densities—measured as cooling or heating power per unit area—and better overall performance. Crucially, improving efficiency at the microscale depends on balancing reduced dimensions with the challenges of increased electrical and thermal resistance. Many of the studies mentioned rely on a mix of experimental testing and simulation methods like FEA to optimize the performance and layout of micro thermoelectric systems. Building on this foundation, the present work offers a detailed analytical approach, paired with experimental validation, to reinforce and expand upon earlier findings. To ensure the accuracy and practical relevance of the analytical results, it's essential to design, fabricate, and test a physical μTEC module. This hands-on testing allows researchers to directly compare predicted performance with real-world behavior, ultimately confirming the reliability and applicability of the analysis.

Modeling of Micro Thermoelectric Cooler Module

Consider a single thermocouple from a thermoelectric module used in a μTEC to study the effects of thermal and electrical contact resistances, as shown in Fig. 1. A formula is derived to calculate the actual coefficient of performance (COP) and cooling power, incorporating the impact of these contact resistances. We assume that the material properties remain constant with temperature. This assumption is true in the case of using effective material properties as discussed and addressed in some previous works by

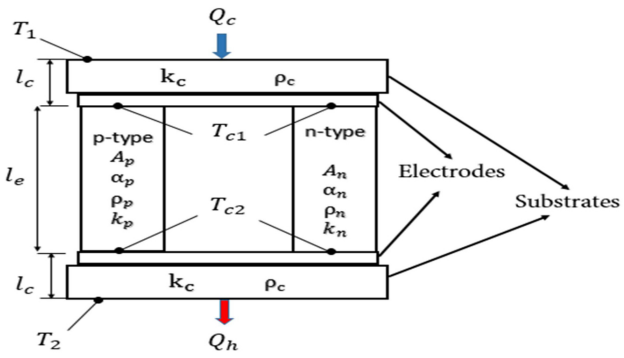

Fig. 1. Basic configuration of a micro thermoelectric cooler couple.

Elarusi, A. H. et al. [20]. In addition, the thermal resistance of the conductors is negligible.

At steady state, the heat balance can be expressed as:

$$Q_2 = \frac{Ak_c}{l_c}\ (T_1 - T_{1c}) \tag{1}$$

$$Q_2 = \alpha I T_{1c} - \frac{1}{2}I^2\left(\frac{\rho l}{A} + \frac{\rho_c}{A}\right) - \frac{Ak}{l}\ (T_{2c} - T_{1c}) \tag{2}$$

$$Q_1 = \alpha I T_{2c} + \frac{1}{2}I^2\left(\frac{\rho l}{A} + \frac{\rho_c}{A}\right) - \frac{Ak}{l}\ (T_{2c} - T_{1c}) \tag{3}$$

$$Q_1 = \frac{Ak_c}{l_c}\ (T_{2c} - T_2) \tag{4}$$

Eqs. (1) to (4) are solved numerically using a mathematical program to determine the temperatures at the cold and hot junctions (T_{1c} and T_{2c}, respectively) as function of six parameters

$$T_{1c} = T_{1c}\left(I, T_1, A_e, l_c, \rho_c, k_c\right) \tag{5}$$

$$T_{2c} = T_{2c}\left(I, T_1, A_e, l_c, \rho_c, k_c\right) \tag{6}$$

Where

$$W = I^2 \times R$$

$$COP = \frac{Q_2}{W}$$

2. Experimental study of micro thermoelectric cooler module

2.1. Experimental description

When operating a micro thermoelectric module as a cooling device, key parameters to control for optimizing performance include the junction temperatures (cold and hot) and the current or voltage (input power to the device). It is essential to ensure steady-state conditions for accurate performance evaluation as addressed by Weera, S. L. L. [17]. At a steady state, the temperatures must remain constant over time to ensure that the heat transfer rate is stable and consistent. While μTEC are primarily tested as cooling devices, they can also function as heaters by reversing the module's polarity. A power supply delivers the required DC current and voltage to the module, with the cold side of the module applied to a heat source. The most common approach involves surface-to-surface solid heating using flat heaters as addressed by Miorandi, D., et al. [18] and Faraji, A. Y., et al. [19]. In this study, the heat source consists of a cartridge heater embedded in an aluminum block with high thermal conductivity. All heater surfaces are insulated except for the one in contact with the TE module. A DC power source is used to supply continuous and consistent power to the heater, maintaining steady-state conditions. Since μTECs operate on the thermodynamic principle of cooling power, the heat absorbed on the cold side and the input power must be released through the hot side. On the hot side, forced fluid convection cooling is employed to dissipate heat. Maintaining a constant flow rate of the cooling fluid is critical for achieving and preserving steady-state conditions. Secondary heat exchange systems are utilized for liquid cooling, where the heat absorbed by the fluid is transferred to the ambient environment through a heat pump or refrigeration process. To achieve these conditions, a bath temperature controller is used. In current work, the hot-side temperature was regulated using a Thermo Scientific NESLAB RTE 7 recirculating bath temperature controller.

2.2. Experimental setup

The experimental setup used in this research was designed to validate the theoretical analysis of the micro thermoelectric cooler device. The test stand is spacious enough to accommodate commercial thermoelectric modules with dimensions up to 40 × 40 mm^2, though the thermoelectric area used in this study is 3.81 × 3.81 mm^2. Fig. 2(a) shows the layout of the test stand connected to a circuit that includes a power supply, while Fig. 2(b) provides a schematic of the test stand with the side insulation pad removed.

During μTEC testing, a TCR 10 20S30D-2-D power supply (see Fig. 3(a)) was used, which provides a DC output of up to 20 V and 30 A. The heat source was a heater block consisting of a cylindrical cartridge heater, manufactured by Omega Engineering,

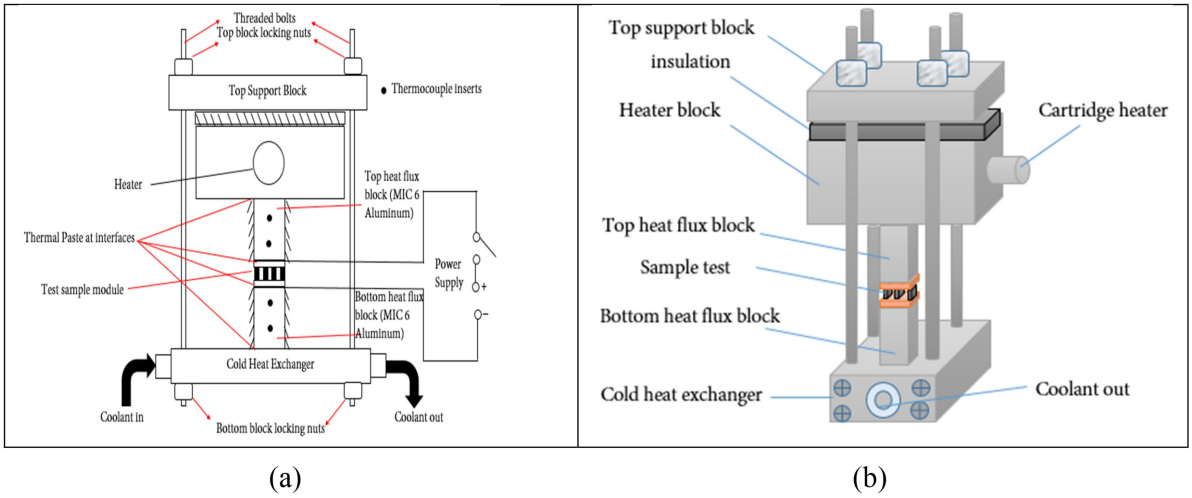

Fig. 2. (a) Schematic of experimental setup, (b) Schematic of test stand (without insulation).

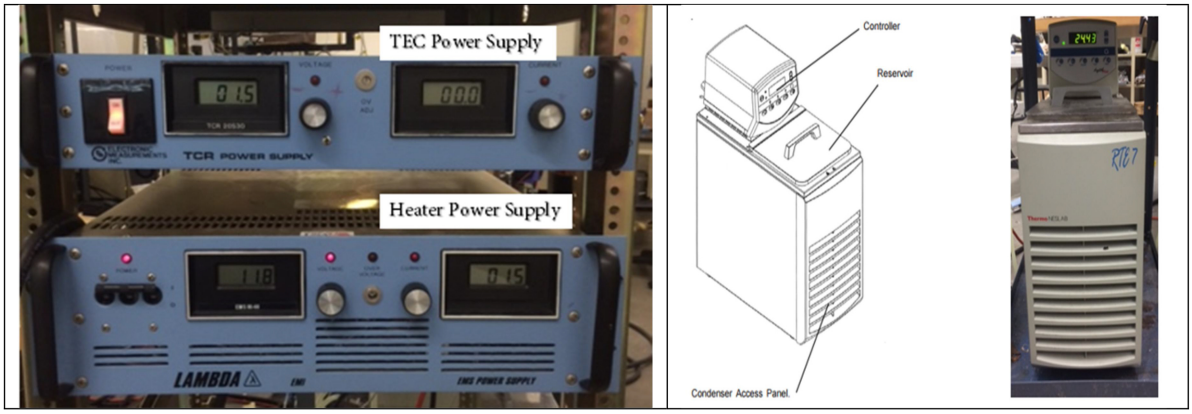

Fig. 3. (a) Power supplies for heaters and micro thermoelectric device, (b) Stand recirculating bath temperature controller.

Inc. (part no. CSS-403300/120V). The heater has a diameter of 15.875 mm (5/8″) and a length of 88.9 mm (3.5″). It is rated to deliver up to 7.75 W/cm^2 of power per unit area. The heater was powered by a TDK-Lambda EMS 80–60 model power supply (Fig. 3(b)), which provides a maximum output of 5000 W (60 A DC and 80 V). The bath temperature controller, mentioned earlier, can maintain a temperature range between 248 K and 423 K. The cooling fluid used was a 50/50 mixture of glycerin and water, with freezing and boiling points of 250.2 K and 379 K, respectively. An internal 0.8 kW heater with PID control was employed to maintain the recirculating fluid at the desired operating temperature. The heater and cold side sources were positioned on either side of the module, with heat flux blocks placed in between. These blocks were made of MIC 6 aluminum, with an estimated thermal conductivity of 1.42 W/cm·K. Each aluminum block measured 4 mm × 4 mm × 10 mm. Two thermocouples were inserted into each block at two positions on the same vertical plane, with a 4.6 mm center-to-center distance between the holes. K-type thermocouples with standard stainless-steel sheathing were used. Each slot for the thermocouple had a diameter of 0.6 mm and a depth of 2 mm. The aluminum blocks were insulated on all sides except for the surfaces in contact with the heat source or coolant and the module sides.

Table 1 presents the geometric properties (dimensions) of the test sample, along with the effective material properties which were calculated based on

Table 1. Characteristics of experimental 18-couple sample.

Parameter (Symbol)	Unit (s)	Value (s)
Effect Seebeck Coefficient (α^*)	V/K	$2.151*10^{-4}$
Effect electrical resistivity (ρ^*)	Ω m	$8.097*10^{-6}$
Effect thermal conductivity (k^*)	W/m K	2.209
Cross section area of TEelement (A_e)	mm^2	0.37*0.37
Element length (l_e)	mm	0.6
TE area (A)	mm^2	3.81*3.81
Number of TE element (n)	–	36
Substrate thickness (l_c)	mm	0.25

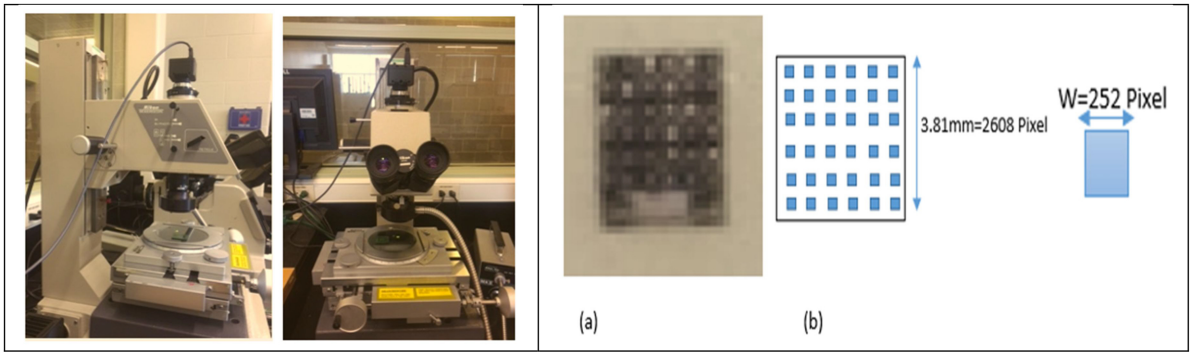

Fig. 4. (a) Microscope (Nikon Measure scope), (b) Top view for real picture of module tested under microscope and dimension explanation.

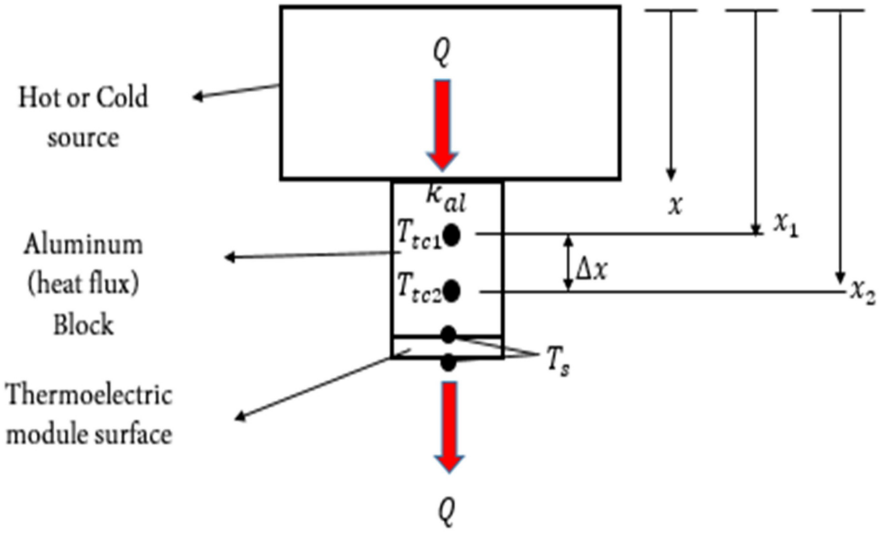

Fig. 5. Temperature extrapolation and heat flux measurement.

study by Elarusi, A. H., et al. [20]. The cross-sectional area of the thermoelectric element was measured using a Nikon Measure Scope microscope, as shown in Fig. 4(a), since the manufacturer did not provide these parameters to consumers. The manufacturer's provided dimensions, such as the module's width and length, allowed for easier measurement using the microscope. This facilitated the creation of an equation to convert pixel units to millimeter units, as the microscope provides measurements in pixels, and direct conversion from pixels to millimeters is not straightforward (see Fig. 4(b)). Subsequently, the module element was measured, as shown in Fig. 4(b).

The heat flux blocks served two purposes. First, they were used to measure the heat per unit area at the specific junctions of the module. Second, they allowed for the measurement of the cold and hot junction temperatures through a linear extrapolation process (see Fig. 5), which illustrates the heat transfer diagram. With proper insulation and assuming excellent contact between interfaces, along with constant heat fluxes from the cooling or heating sources, the heat transfer rates can be considered in a one-dimensional manner.

2.3. Experimental control

To ensure precise testing of the micro thermoelectric module under varying operating conditions, a closed-loop control system was implemented. Many manufacturers specify baseline temperatures for testing, which often serve as operational limits. For thermoelectric coolers, the hot side temperature is the main limiting factor. Closed-loop control was applied to the test stand by managing the heater and bath temperature controller to maintain desired junction temperatures. Fig. 6 shows the setup with two power supplies—one for controlling the heater and the other for powering the sample test—along with thermocouples. Both power supplies and

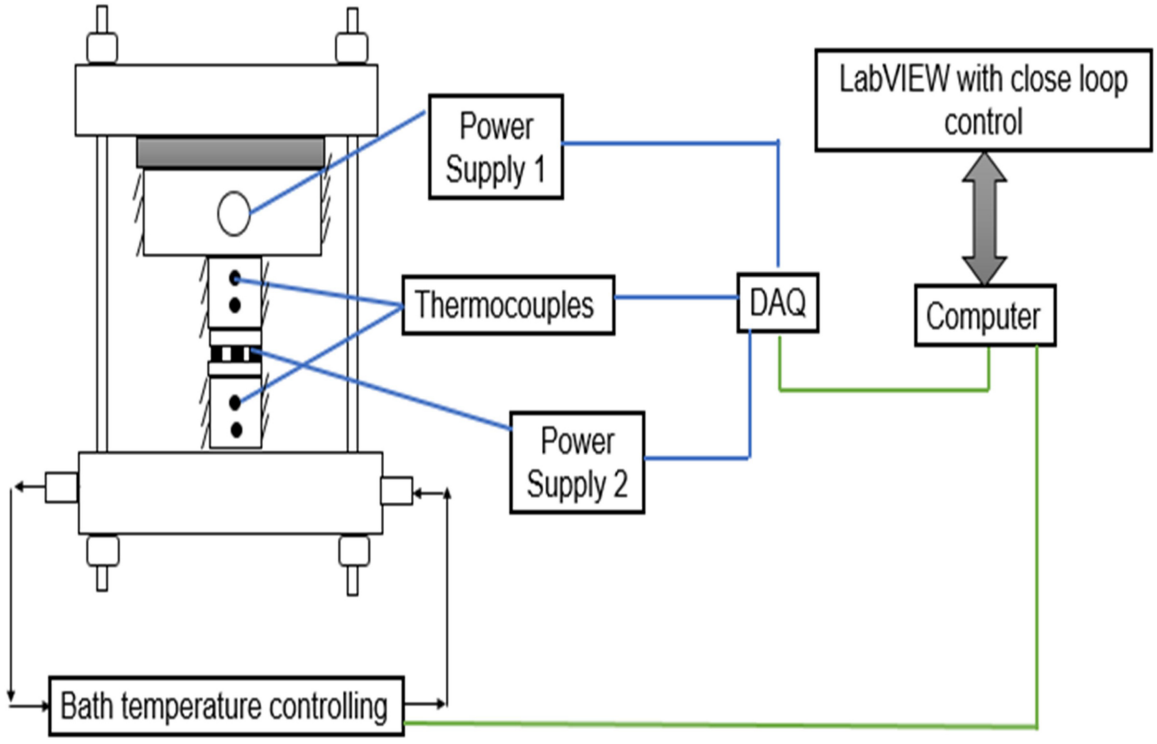

Fig. 6. Overview of experimental control.

thermocouples were connected to a National Instruments data acquisition (DAQ) system, which included an SCXI-1000 chassis and SCXI-1303 terminal block for high-accuracy temperature measurement. The power supply to the heat source featured remote control capability and was linked to the DAQ through a PCI 6063-E analog terminal block. The bath temperature controller was connected to the computer via an RS 232 serial cable. Temperature readings were sampled at 1 Hz (one sample per second). Transient data was not critical for this experiment, so the sampling rate was set to 1 Hz. All data acquisition and equipment control were managed via National Instruments LabVIEW software. A Virtual Instrument (VI) was created in LabVIEW to integrate the power supplies, bath controller, and temperature readings. Fig. 7 displays the VI front panel, showing four waveform graphs of thermocouple readings over time, with two representing the junction temperatures extrapolated from the readings. Notably, the VI was operational even during the transient phase of testing.

2.4. Experimental procedure

Fig. 8 illustrates the process of obtaining data points to validate the performance of the module. The first step was to install the test sample between the aluminum blocks (heat flux). To minimize thermal contact resistance due to micro cracks and surface defects on the blocks, a highly conductive thermal paste was applied. Uniform pressure was applied using bolts and nuts to ensure proper contact. The VI was executed, and μTEC was tested to provide the required current or voltage. The next step was to set the desired junction temperatures, which the bath temperature controller maintained while the module operated. The system required 30 to 50 minutes to reach a steady-state condition, with longer times for higher input power or larger temperature differences across the module. Steady state was determined when temperature readings stabilized for 2–3 minutes. Afterward, data was collected and saved into a spreadsheet using VI.

2.5. Uncertainty of experimental data

Uncertainty in experimental measurements is inevitable due to instrument limitations, environmental factors, and human errors. In this study, we analyze the possible uncertainties affecting the micro thermoelectric cooler (μTEC) experiment and quantify their impact on the results.

2.5.1. Measurement instrumentation uncertainty

- Temperature Sensors (Thermocouples): Thermocouples have an inherent error margin around $\pm 0.5^{\circ}$C.

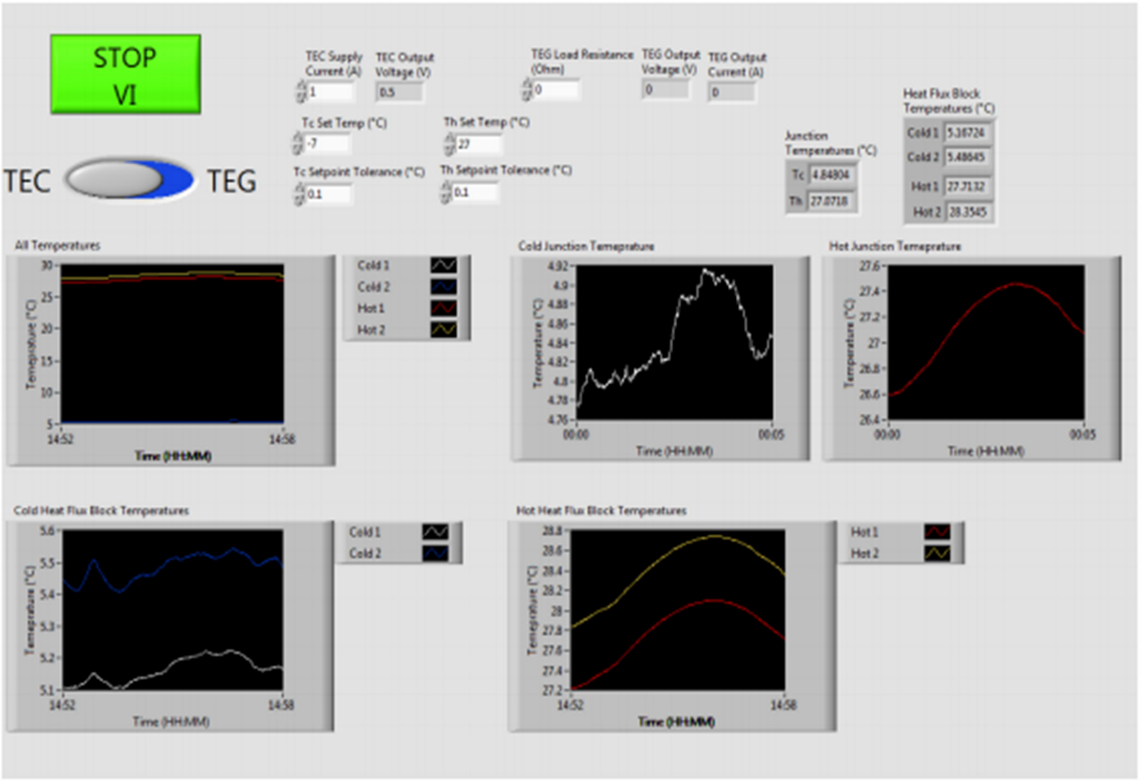

Fig. 7. Front panel of data acquisition VI.

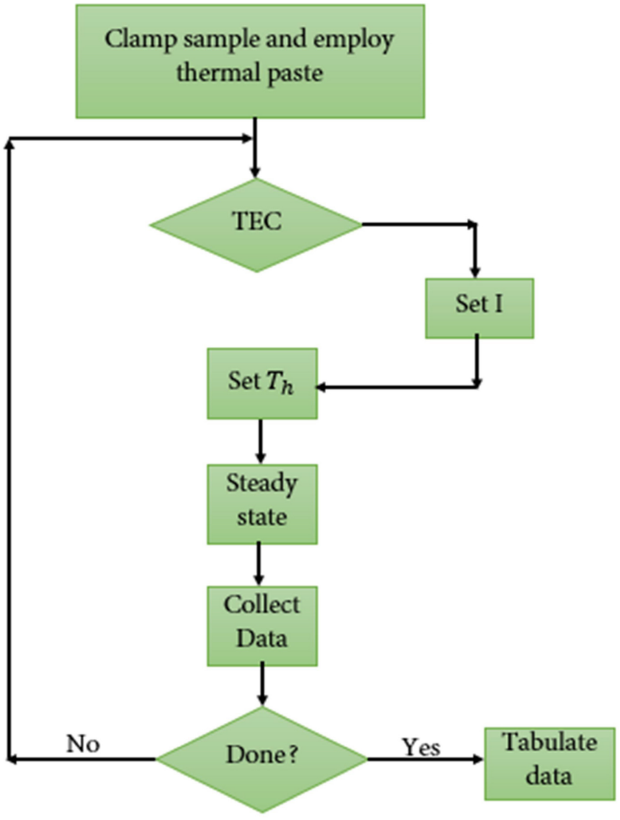

Fig. 8. Flowchart of experimental performance evaluation.

- Voltage and Current Sensors: Digital multimeters and data acquisition systems introduce uncertainties of $\pm 0.1\%$ of the reading.
- Thermal Conductivity Measurements: The precision of heat flux sensors affects the heat transfer calculations, leading to an estimated error of $\pm 2\%$.

2.5.2. *Environmental and systematic factors*

- Ambient Temperature Fluctuations: Variations in the surrounding temperature may alter heat transfer rates.
- Contact Resistance and Interface Imperfections: Thermal and electrical contact resistances introduce inconsistencies, contributing to additional uncertainty.
- Heat Losses: Unaccounted convection and radiation losses cause deviations from idealized calculations.

2.5.3. *Experimental procedure and human errors*

- Reproducibility: Variations in experimental setup alignment or thermal contact pressure led to deviations.
- Data Recording and Processing: Rounding errors and sampling rate limitations introduce some uncertainties.

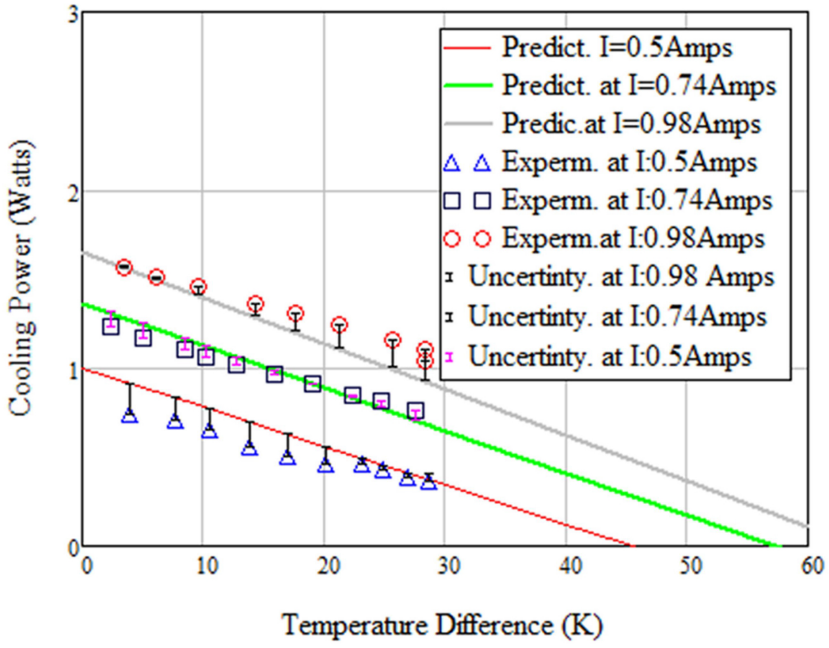

Fig. 9. Cooling power versus temperature differences for analytical and experimental data.

3. Results and discussions

Fig. 9 shows a comparison between the experimental and predicted cooling power of the micro thermoelectric cooler (μTEC) across different temperature differences (ΔT) at three current levels 0.5 A, 0.74 A, and 0.98 A. As expected, both the experimental and predicted results reveal a general trend: cooling power decreases linearly as ΔT increases. Higher current levels consistently result in greater cooling power for the same temperature difference. However, there are noticeable differences between the experimental outcomes and the theoretical predictions at each current level. At the highest current (0.98 A), the predictions are quite close to the experimental results, though they tend to slightly overestimate cooling performance at larger ΔT values. This slight overestimation may stem from simplifying assumptions in the theoretical model—particularly those that don't fully account for heat losses or shifts in thermal contact resistance. At the lower currents—0.74 A and 0.5 A—the predicted values often fall short of the experimental measurements, especially at higher temperature differences. This suggests that the model doesn't fully capture real-world complexities, such as variations in material behavior, imperfect thermal contact, or additional sources of heat like Joule heating. Several factors could be behind these discrepancies. For one, Joule heating becomes more significant at higher currents, leading to localized hot spots that affect both performance and thermal contact resistance. In addition, surface imperfections or aging at the contact interfaces can cause fluctuations in electrical and thermal resistance, further skewing the results. Heat losses from radiation and convection—especially when temperature differences are large—can also contribute to the gap between theory and practice. Altogether, these findings highlight the need for more refined models that take into account the dynamic behavior of materials, non-uniform heat distribution, and changing contact resistance under real operating conditions. By addressing these variables, future models could offer more accurate predictions and lead to better-performing thermoelectric devices.

Fig. 10 presents both experimental and predicted values for the coefficient of performance (COP), showing a reasonable level of agreement between the two. The graph illustrates how COP varies with current input under two different temperature differences ($\Delta T = 10$ K and $\Delta T = 23$ K), shedding light on how thermal conditions influence efficiency. As expected, the COP increases with current up to a certain point, after which it begins to decline. This trend is typical in thermoelectric cooling systems, where higher currents eventually lead to excessive Joule heating, which reduces overall efficiency. At the lower temperature difference ($\Delta T = 10$ K), the COP peaks around 0.3 A, indicating that the system operates more efficiently under lighter thermal loads. A smaller ΔT means reduced thermal stress and easier heat dissipation, allowing for better performance.

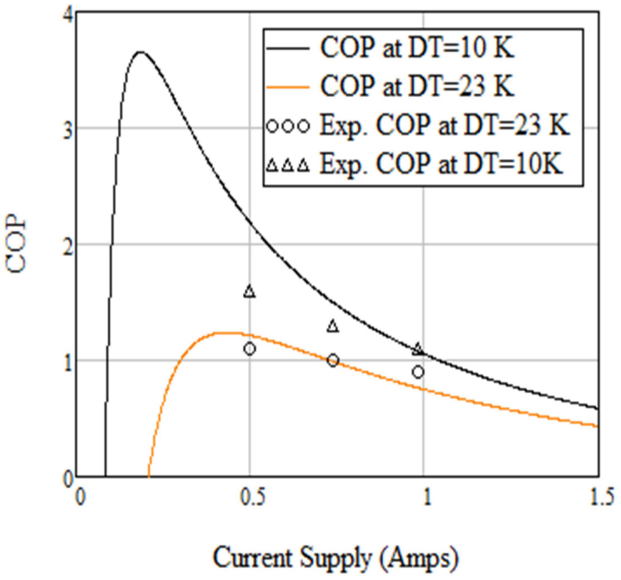

Fig. 10. Coefficient of performance versus current supply for analytical and experimental data.

In contrast, when ΔT increases to 23 K, the COP drops, peaking closer to 0.2 A. This suggests that higher temperature gradients negatively affect efficiency, as more energy is required to maintain the cooling process. At higher ΔT, resistive losses grow, and heat dissipation becomes more challenging, both of which contribute to the reduced performance. While the experimental data align fairly well with theoretical predictions near the COP peak, deviations become more apparent at higher current levels. Several factors likely contribute to this. Increased Joule heating at elevated currents raises the device temperature, which diminishes thermoelectric effectiveness. In addition, variations in contact resistance at the interfaces between the thermoelectric elements and the heat sinks can impact heat transfer and introduce discrepancies. Heat losses through radiation and convection also become more significant as ΔT rises, further affecting overall performance. To improve both predictive accuracy and system efficiency, future studies could focus on enhancing thermal interface quality, selecting advanced thermoelectric materials with lower electrical resistance, and refining theoretical models to better account for changes in material properties under different thermal loads. Computational tools like finite element analysis (FEA) or machine learning-based simulations can also be helpful in modeling complex, real-world behaviors more accurately. Exploring improved cooling techniques—such as integrating phase-change materials or microchannel heat sinks—could also help reduce losses at higher ΔT, leading to more consistent performance across a wide range of conditions. That said, the COP achieved in this study (0.32 at $\Delta T = 10$ K) is lower than values reported in similar research, such as Semenyuk [7], who recorded a COP of 0.5 under similar conditions. Additionally, the measured cooling power of 2.5 W falls short of the 3 W benchmark noted by Zhu et al. [3]. These differences could stem from several factors, including variations in module design, material quality, contact resistance, or even differences in the experimental setup. Issues like Joule heating, heat dissipation effectiveness, and contact interface integrity may also play a role. Further improvements in module geometry, material selection, and heat sink design may help close the performance gap and enhance the overall efficiency of μTEC systems.

4. Conclusion

This research demonstrated the effectiveness of a micro thermoelectric cooler (μTEC) by comparing experimental results with theoretical predictions. Key factors—such as the applied electrical current, thermal contact resistance, and the efficiency of heat removal—were found to significantly influence both cooling power and overall efficiency. Under optimal operating conditions, the experimental data closely matched theoretical forecasts. However, at higher temperature gradients, some discrepancies emerged, mainly due to effects like Joule heating and increased contact resistance. Improving μTEC performance requires careful refinement of thermoelement dimensions, better interface engineering, and the use of more efficient materials. These findings have practical implications, especially in managing heat in compact, high-performance electronics. μTECs are particularly valuable in applications where traditional cooling methods—such as fans or liquid-based systems—are not feasible due to space limitations or energy constraints. This makes them ideal for cooling components like processors, high-powered LEDs, and sensors in tightly packed electronic devices. Beyond consumer electronics, μTECs hold promise in industries like automotive and aerospace, where effective thermal management in a compact form is critical. Looking ahead, future research should focus on boosting μTEC performance through advanced thermal management strategies and by minimizing energy losses. This could involve developing new materials with higher thermoelectric efficiency and better thermal conductivity, as well as optimizing the design of thermoelectric modules and associated heat dissipation systems. There's also growing potential in using artificial intelligence (AI) to support the design process, helping fine-tune system parameters and improve performance prediction

models. Additionally, gaining a deeper understanding of complex, non-linear effects—such as Joule heating and variable thermal contact resistance—could lead to more accurate modeling and greater efficiency. Exploring hybrid cooling approaches, where μTECs are combined with other cooling technologies, might also open up exciting new pathways for enhancing thermal performance in advanced electronic systems.

Conflict of interest

The authors declare that they have no conflict of interest.

Author contributions

Mohammed Dhannoon: Conceptualization, experimental design and setup, data acquisition, analysis, and interpretation, manuscript writing (original draft).

Hassan Fagehi: Supervision, theoretical modeling and validation, resources and funding acquisition, manuscript review and editing, project administration.

Both authors have read and approved the final manuscript.

Data availability

The data that support the findings of this study are available on request from the corresponding author.

Nomenclature

A	Cross-sectional area (mm^2)
W	Power output (W)
I	Electric current (A)
k	Thermoelement thermal conductivity (W/m K)
l	Length (mm)
Q	Rate of heat transfer (W)
T	Junction temperature (˚C)
R	Thermal resistance (Ω)

Greek symbols

α	Seebeck coefficient (V/K)
ρ	Electrical resistivity (Ω m)

Subscripts

e	Thermoelement
1	Hot
2	Cold
c	ceramic
L	Load resistance

References

1. Bottner H, Nurnus J, Gavrikov A, Kuhner G, Jagle M, Kunzel C, Eberhard D, Plescher G, Schubert A, Schlereth K. New thermoelectric components using microsystem technologies. Journal of Microelectromechanical Systems. 2004b;13(3):414–420. doi: 10.1109/jmems.2004.828740.
2. Attar A. Studying the optimum design of automotive thermoelectric air conditioning. 2015. https://scholarworks.wmich.edu/cgi/viewcontent.cgi?article=2165&context=dissertations.
3. Zhu W, Deng Y, Wang Y, Wang A. Finite element analysis of miniature thermoelectric coolers with high cooling performance and short response time. Microelectronics Journal. 2013;44(9):860–868. doi: 10.1016/j.mejo.2013.06.013.
4. Böttner H, Chen G, Venkatasubramanian R. Aspects of thin-film superlattice thermoelectric materials, devices, and applications. MRS Bulletin. 2006;31(3):211–217. doi: 10.1557/mrs2006.47.
5. Huang B, Chin C, Duang C. A design method of thermoelectric cooler. International Journal of Refrigeration. 2000;23(3):208–218. doi: 10.1016/s0140-7007(99)00046-8.
6. Semenyuk V. Thermoelectric micro modules for spot cooling of high density heat sources. 2002. doi: 10.1109/ict.2001.979914.
7. Semenyuk V. Miniature thermoelectric modules with increased cooling power. 2006;322–326. doi: 10.1109/ict.2006.331216.
8. Min G, Rowe D. Optimisation of thermoelectric module geometry for 'waste heat' electric power generation. Journal of Power Sources. 1992;38(3):253–259. doi: 10.1016/0378-7753(92)80114-q.
9. Gomez M, Reid R, Ohara B, Lee H. Influence of electrical current variance and thermal resistances on optimum working conditions and geometry for thermoelectric energy harvesting. Journal of Applied Physics. 2013;113(17). doi: 10.1063/1.4802668.
10. Semeniouk V, Fleurial J. Novel high performance thermoelectric microcoolers with diamond substrates. 2002;316:683–686. doi: 10.1109/ict.1997.667622.
11. Pérez-Aparicio J, Palma R, Taylor, R. Finite element analysis and material sensitivity of Peltier thermoelectric cells coolers. International Journal of Heat and Mass Transfer. 2011;55(4):1363–1374. doi: 10.1016/j.ijheatmasstransfer.2011.08.031.
12. Lee KH, Kim H, Kim OJ. Effect of thermoelectric and electrical properties on the cooling performance of a micro thermoelectric cooler. Journal of Electronic Materials. 2010;39(9):1566–1571. doi: 10.1007/s11664-010-1285-2.
13. Kim H, Kim OJ, Lee KH, Elimelech M. Optimal design of a microthermoelectric cooler for microelectronics. Microelectronics Journal. 2011;42(5):772–777. doi: 10.1016/j.mejo.2011.01.007.
14. Wu K, Hung C. Thickness scaling characterization of thermoelectric module for small-scale electronic cooling. *中國機械工程學刊*. 2009;30(6):475–481. doi: 10.29979/jcsme.200912.0004.
15. Chen W, Liao C, Hung C. A numerical study on the performance of miniature thermoelectric cooler affected by Thomson effect. Applied Energy. 2011;89(1):464–473. doi: 10.1016/j.apenergy.2011.08.022.
16. Goncalves L, Rocha J, Couto C, Alpuim P, Correia J. On-chip array of thermoelectric Peltier microcoolers. Sensors and Actuators a Physical. 2008;145–146:75–80. doi: 10.1016/j.sna.2007.10.062.

17. Weera SLL. Analytical performance evaluation of thermoelectric modules using effective material properties. 2014. https://scholarworks.wmich.edu/cgi/viewcontent.cgi?article=1493&context=masters_theses.
18. Miorandi D, Sicari S, De Pellegrini F, Chlamtac I. Internet of things: Vision, applications and research challenges. Ad Hoc Networks. 2012;10(7):1497–1516. doi: 10.1016/j.adhoc.2012.02.016.
19. Faraji A, Akbarzadeh A. Design of a compact, portable test system for thermoelectric power generator modules. Journal of Electronic Materials. 2012;42(7):1535–1541. doi: 10.1007/s11664-012-2314-0.
20. Elarusi AH, Fagehi H, Lee H, Attar A. Theoretical approach to predict the performance of thermoelectric generator modules. Journal of Electronic Materials. 2016c;46(2):872–881. doi: 10.1007/s11664-016-4948-9.