Yanbu Journal of Engineering and Science

Volume 6 | Issue 1 Article 2

2013

DEVELOPED SOFTWARE FOR CATHODIC PROTECTION OF STORAGE TANKS FOR INDUSTRIAL APPLICATIONS

Kareem M. Nagy
University of Alexandria, Egypt

E.N. Abdallah
University of Alexandria, Egypt

N. H. Abbasy
University of Alexandria, Egypt

Follow this and additional works at: https://yjes.researchcommons.org/yjes

The journal in which this article appears is hosted on Digital Commons, an Elsevier platform.

Recommended Citation

Nagy, Kareem M.; E.N. Abdallah; and Abbasy, N. H. (2013), DEVELOPED SOFTWARE FOR CATHODIC PROTECTION OF STORAGE TANKS FOR INDUSTRIAL APPLICATIONS, *Yanbu Journal of Engineering and Science*: Vol. 6: Iss. 1, 7-16.
DOI: https://doi.org/10.53370/001c.24094
Available at: https://yjes.researchcommons.org/yjes/vol6/iss1/2

This Research Article is brought to you for free and open access by Yanbu Journal of Engineering and Science. It has been accepted for inclusion in Yanbu Journal of Engineering and Science by an authorized editor of Yanbu Journal of Engineering and Science.

Yanbu Journal
of
Engineering
and Science
ISSN: 1658-5321

Vol. 6, April 2013 (1434H)
www.yjes.org.sa

DEVELOPED SOFTWARE FOR CATHODIC PROTECTION OF STORAGE TANKS FOR INDUSTRIAL APPLICATIONS

Kareem M. Nagy, E. N. Abdallah and N. H. Abbasy

Electrical Engineering Department, Alexandria University, Alexandria, Egypt

ABSTRACT

Cathodic protection is one of the commonly used techniques to control the corrosion of a metal surface by making the protected metal as a cathode of an electromechanical cell. The main issue of this paper is studying the cathodic protection system of storage tanks to develop a software program, which can be used in designing such a system. This developed software program won't depend only on the criterion of the total required weight of the anodes, but it will also make a check on the required current for the cathodic protection system to cover the current demand for the system. This software is a general one which can be used for any cylindrical storage tank.

Keywords: *Cathodic Protection, Sacrificial Anode, Impressed Current, Software Program.*

1. INTRODUCTION

Corrosion is the destructive attack of a material by reaction with its environment. The serious consequences of the corrosion process have become a problem of worldwide significance. In addition to our everyday encounters with this form of degradation, corrosion causes plant shutdowns, waste of valuable resources, loss or contamination of product, reduction in efficiency, costly maintenance, and expensive overdesign; it also jeopardizes safety and inhibits technological progress.

Cathodic protection is an electrochemical method of preventing corrosion on metallic structures which are in electrolytes such as soil or water. It has a widespread application on underground pipelines, and ever increasing use as the most effective corrosion control method for numerous other underground and underwater structures such as lead cables, storage tanks, lock gates and dams, steel pilings, ship hulls and interiors. Cathodic protection is the most widely applied electrochemical corrosion control technique.

In this paper, a software for cathodic protection system design will be developed using MATLAB programming, so to develop such a program; electrochemical basis of the cathodic protection will be discussed at the first, and then different types of cathodic protection systems will be illustrated, after that cathodic protection electrochemical criteria and consequences of under and over protection will be mentioned. Anode-bed different types are an important part of the system design to determine the overall system resistance. Design procedure and equations will be illustrated to develop the new software program which will be used is cathodic protection system design. Finally, the developed program will be applied to an existing tank to check the functionality and accuracy of the developed program.

Received: February 1, 2012 Accepted: November 20, 2012

2. CATHODIC PROTECTION ELECTROCHEMICAL BASIS

Metallic substances in nature have a certain natural energy level or potential as shown in Table (1). When two metals having different energy levels or potentials are coupled together, current will flow. The direction of positive current flow will be from the metal with the more negative potential through the electrolyte to that which is more positive. Corrosion will occur at the point where positive current leaves the metal surface. [1]

TABLE 1: ENERGY LEVEL FOR DIFFERENT MATERIALS

Metal	**Volts Vs. Cu-$CuSO_4$ Reference electrode**	
Magnesium	-1.7	Increasing energy level ↑
Aluminum	-1.1	
Zinc	-1.1	
Steel	-0.6	
Steel in concrete with Cl^-	-0.5	
Steel in concrete without Cl^-	-0.1	
Copper	-0.1	
Carbon	+0.4	
Silver	+0.5	
Platinum	+0.9	
Gold	+1.2	

Cathodic protection utilizes a flow of direct current electricity to interfere with the activity of the electrochemical cell responsible for corrosion. As shown in Fig.1, corrosion can be prevented by coupling a metal with a more active metal when both are immersed in an electrolyte and connected with an external path. In this case the entire surface of the metal being protected becomes a cathode; thus the term "Cathodic Protection". [2]

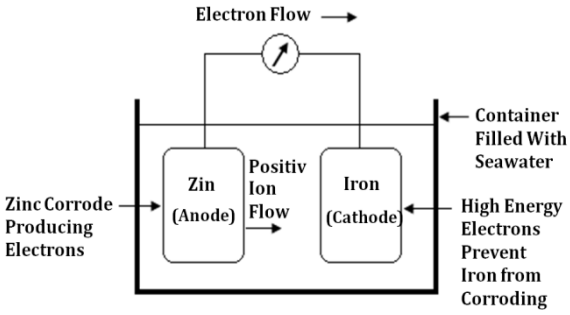

Fig.1. Electrochemical Cell

3. CATHODIC PROTECTION TYPES

There are two types of cathodic protection systems namely; the sacrificial anode cathodic protection system and the impressed current cathodic protection system [3].

THE SACRIFICIAL ANODE SYSTEM

The sacrificial anode technique uses the natural potential difference that exists between the structure and a second metal in the same environment to provide the driving voltage. No power source is employed as illustrated in Fig. 2. Moreover, the dissolution of the second metal i.e. the sacrificial anode provides the source of electrons for cathodic polarization of the structure. In practice, the anode, which will be on a steel core, can be attached directly to the structure.

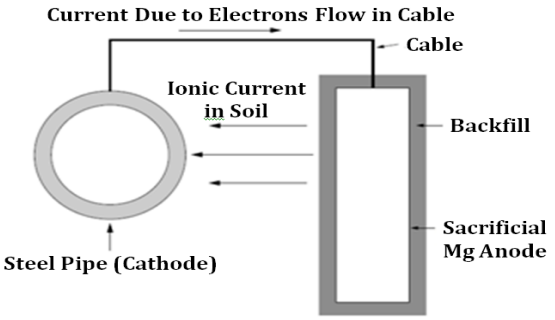

Fig. 2. A Schematic Diagram of Cathodic Protection with Sacrificial Anode System

The anode material must provide a certain driving voltage to generate sufficient current to adequately protect a structure. The materials used for sacrificial anodes are either relatively pure active metals such as Zinc or

Magnesium, or alloys of Magnesium or Aluminum that have been specifically developed for use as sacrificial anodes.

The advantage of Magnesium alloy is the large potential difference between magnesium alloy and steel compared to zinc or aluminum, but the disadvantage is the low efficiency of the anode, which is about 50 % for design purposes. For zinc, the advantage of zinc alloys is the high efficiency, as the efficiency of zinc is commonly 90% to 95% regardless of current output. Aluminum anodes efficiency is about 94 %, but above 50 °C, the efficiency of aluminum anodes decreases and can drop to 25 %. Similar to Zinc alloys, Aluminum alloys have a low driving potential and the polarity of them will be reversed above 60ºC [4, 5]. Table (2) shows properties of some sacrificial anode materials.

TABLE 2: PROPERTIES OF SOME SACRIFICIAL ANODE MATERIALS

Anode Alloy	Potential Vs. Cu-$CuSO_4$ (V)	Capacity (Ah/kg)	Consumption (kg/A. year)
Zinc (Mil-Spec)	-1.05 to -1.10	780	1.1
Aluminum-indium	-1.15	2500	3.3
High Output Mg	-1.80	1100	8.0

THE IMPRESSED CURRENT SYSTEM

In impressed current systems cathodic protection is applied by means of an external power current source as shown in Fig. 3. In contrast to the sacrificial anode systems, the anode consumption rate is usually much lower. Unless a consumable "scrap" anode is used, a negligible anode consumption rate is actually a key requirement for long system life. Impressed current systems typically are favored under high-current requirements and/or high-resistance electrolytes [6].

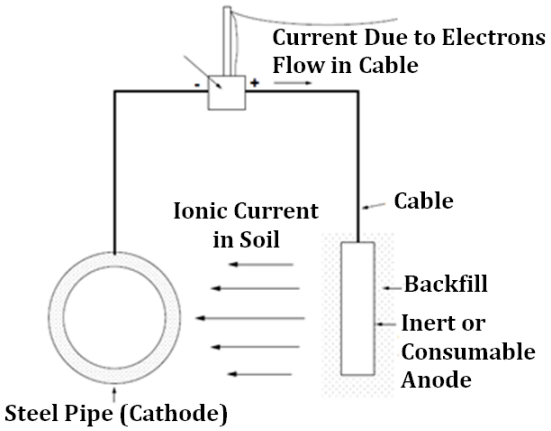

Fig.3. Schematic Diagram of Cathodic Protection with Impressed Current System

The materials commonly used for impressed current cathodic protection have the capability of passing a current into the environment without being consumed at a high rate. Graphite and high silicon cast iron are the most commonly used impressed current cathodic protection anode materials; however, other materials such as magnetite, platinum, and newly developed Mixed Metal Oxide (MMO) materials have been successfully used. For buried anodes, a backfill consisting of carbonaceous material is normally used to decrease the electrical resistance of the anode; to provide a uniform, low resistivity environment surrounding the anode; and to allow for the venting of gasses produced at the anode surface. Table (3) shows properties of some impressed current anodes materials.

TABLE 3: PROPERTIES OF SOME IMPRESSED CURRENT ANODES MATERIALS

Anode Material	Max. Current Density A/m^2	Working Current Density A/m^2	Consumption Rate kg/A. year
Steel	-	0.5	1.1
Aluminum	10	4.8	2.0
Graphite	25	2.5 to 10	0.25
Silicon Iron	50	5 to 25	0.1
Magnetite	200	115	0.02
Lead Alloy	300	50 to 150	0.085

CATHODIC PROTECTION CRITERIA

For submerged and buried structures, criteria based upon the electrochemical potential of the surfaces of the structure to be protected are the most widely used criteria for determining whether or not the structure is being effectively protected. In practical terms, a decision has to be made concerning the level of cathodic protection current that is applied. Too little current will lead to excessive corrosion damage, whereas excessive current or "overprotection" can lead to disbonding of coatings and hydrogen embrittlement. Table (4) provides further information on desirable and undesirable potential ranges for steel according to NACE Standard RP0169-83 [7] and British Standard CP 1021:1973 [8].

TABLE 4: RELATIONSHIP BETWEEN POTENTIAL AND CORROSION RISK STEEL

Potential (V vs. Cu-$CuSO_4$)	Condition of Steel
-0.5 to -0.6	Intense corrosion
-0.6 to -0.7	Corrosion
-0.7 to -0.8	Some protection
-0.8 to -0.9	Cathodic protection
-0.9 to -1.0	Some overprotection
-1.0 to -1.1	Increased overprotection
-1.1 to -1.4	Increasingly severe over protection, coating disbondment and blistering, increasing risk of hydrogen embrittlement.

4. ANODE-BED TYPES USED FOR STORAGE TANKS CATHODIC PROTECTION

Storage tanks are cathodically protected externally (tank base) and internally. To design such systems there are different types of anode beds that can be used as follows:

HORIZONTAL ANODE-BED

Horizontal installations may be necessary when obstructions or other soil conditions make digging holes difficult. Horizontal installations are also used where soil resistivity is very low and the increased resistance of the horizontal installation is not significant. Fig. 4 shows a typical local horizontal distributed anode-bed.

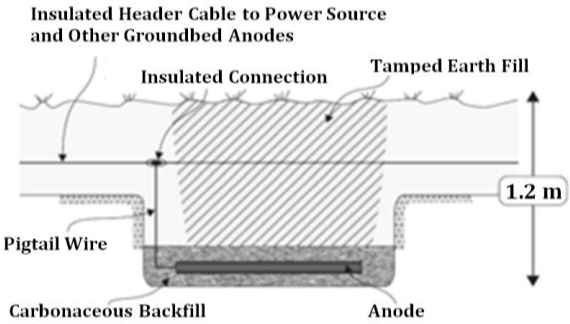

Fig. 4. Horizontal Anode Installation

To determine the resistance of a single horizontal anode, the following relationship is applied (Sunde's Equation):

$$R_a = \frac{\rho}{2\pi L}\left[\ln\left(\frac{4L^2+4L\sqrt{S^2+L^2}}{dS}\right)+\frac{S}{L}-\frac{\sqrt{S^2+L^2}}{L}-1\right] \quad (1)$$

where: R_a is anode resistance (Ω), ρ is soil resistivity (Ω.cm), L is anode length (cm), d is anode diameter (cm) and S is twice anode depth (cm). For N horizontal anodes, the anode-bed resistance (R_{Gbed}) is obtained as follows:

$$R_{Gbed} = \frac{R_a}{N} \quad (2)$$

VERTICAL ANODE-BED

Vertical installations are used in situations when there is a need to obtain lower resistivity, when there are difficulties with trenching for a horizontal bed, or when the physical surface area is limited. Generally, due to their length, vertical bed anodes are brittle and must be carefully handled to prevent breakage. Fig. 5 shows a typical local distributed vertical anode system.

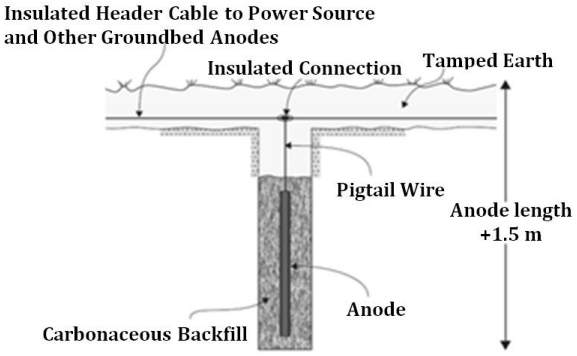

Fig. 5. Vertical Anode Installation

To determine the resistance of a single vertical anode, the following relationship is applied (Dwight's equation):

$$R_a = \frac{\rho}{2\pi L}\left(\ln\frac{8L}{d} - 1\right) \quad (3)$$

For N vertical anodes spaced by a distance equals a (cm), R_{Gbed} is obtained as follows (Sunde's Formula):

$$R_{Gbed} = \frac{\rho}{2\pi NL}\left[\ln\frac{8L}{d} - 1 + \left(\frac{2L}{a}\right)\ln 0.656N\right] \quad (4)$$

STAND-OFF ANODE IN WATER

These anodes are normally trapezoidal anodes, mounted on steel cores or supports by welding at a distance of 25 to 50 cm from the structure surface and are used for internal cathodic protection for storage tanks. For a stand-off, (3) is used to calculate R_a, and (2) is used to calculate R_{Gbed}. For non-cylindrical anodes the mean effective radius is approximated as the radius of cylinder with the same cross-sectional area. Fig. 6 shows stand-off anode in water.

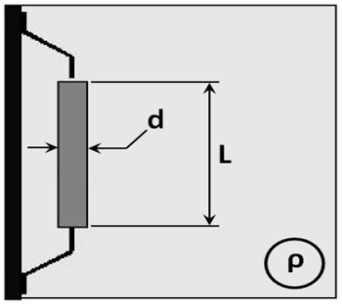

Fig. 6. Stand-off Anode in Water

5. DESIGN PROCEDURE AND SOFTWARE PROGRAM

Codes and standards, which are used in the design of storage tanks cathodic protection systems, are shown in reference section in this paper [9-13].

Before deciding which type, sacrificial or impressed current, cathodic protection system will be used, cathodic protection current requirement must be determined. To calculate the current demand, I_c (A); the individual surface areas, A_c (m^2), of each cathodically protected unit shall be calculated and multiplied by different factors. These factors are the relevant design current density, i_c (A/m^2), and the coating breakdown factor, f_c, if applicable:

$$A = A_c \times i_c \times f_c \quad (5)$$

There are two types of cathodic protection for tanks; Internal Cathodic Protection and External Cathodic Protection (Tank's bottom).

TANKS SACRIFICIAL ANODE CATHODIC PROTECTION

The following steps are followed to design such a system:

- Review electrolyte resistivity.
- Select an anode where each anode specification will include anode weight (ω), anode dimensions, and package dimensions (anode plus backfill). The choice of anode from those available is arbitrary. Design calculations will be made for several available anodes, and the most economical one will be chosen.
- Determine the total weight (W) of anodes. This is required to cover the total lifetime of the cathodic protection system as follows [14]:

$$W = \frac{CR \times T \times I_C}{\eta \times U} \quad (6)$$

where: *CR* is the anode consumption rate (kg/Ampere-year), *T* is desired life time (Year), I_c is the required protection current (A), η is the anode efficiency and *U* is the anode utilization factor.

- Determine the total number of required anodes (N_1) based on the total weight (*W*) and the weight of the selected anode (ω) using the following equation:

$$N_1 = {}^{W}/_{\omega} \quad (7)$$

- Select the anodes distribution layout for the system.
- Calculate the output current per anode, I_a (A), as follows:

$$I_a = {}^{\Delta E}/_{R_a} \quad (8)$$

$$\Delta E = E_c - E_a \quad (9)$$

where: ΔE is the design driving voltage (V), R_a is the anode resistance (Ω), E_c is the design protective potential (V) and E_a is the anode open circuit potential (V).

- Determine the total number of required anodes based on the current requirement, where:

$$N_2 = {}^{I_c}/_{I_a} \quad (10)$$

- Select the total number of anodes to be used (*N*) by choosing the greater number of anodes between N_1 and N_2.
- The design process should be repeated for several different anodes and calculate life-cycle cost for each proposed design to find which one has the minimal cost.

TANKS IMPRESSED CURRENT CATHODIC PROTECTION

The following steps are followed to design such a system:

- Repeat steps from 1 to 4 as in sacrificial anode system.
- From anodes datasheet, the maximum current supplied by the anode ($I_{a\text{-}Max}$) can be determined.
- Determine the number of anodes based on the total current requirement (N_2) from the following formula:

$$N_2 = {}^{I_c}/_{I_{a-Max}} \quad (11)$$

- Select the total number of anodes to be used (*N*) by choosing the greater number of anodes between N_1 and N_2.
- Select the anodes distribution layout for impressed current cathodic protection systems.
- Determine the resistance of the impressed current cathodic protection system using the following equations:

$$R_t = R_{Gbed} + R_c + R_s \quad (12)$$

$$N_2 = \frac{R_{Cable} \times L_{Cable}}{1000} \quad (13)$$

where: R_t is the total circuit resistance (Ω), $R_{Gbed}$is the groundbed resistance (Ω), R_c is the cable resistance (Ω), R_s is the pipeline / structure to earth resistance (Ω), R_{Cable} is the resistance per km (Ω / km) and L_{Cable} is the cable length (m).

- Determine the Transformer / Rectifier (T/R) set rating using Ohm's low as follows:

$$V_{T/R} = I_c \times R_T \times 150\% \quad (14)$$

Where: $V_{T/R}$is the T/R set driving voltage (V) taking 150% as the design safety factor according to (TM 5-811-7) [15].

- Choose the nearest standard rating for the T/R set. (e.g. 12V, 24V, 36V, 48V, 5A, 10A, 15A, 20A…etc).
- According to the available power supply, choose the characteristics of the chosen T/R set.
- The design process should be repeated for several different anodes and calculate life-cycle cost for each proposed design to find which one has the minimal cost.

FLOWCHART FOR THE DEVELOPED SOFTWARE OF STORAGE TANKS CATHODIC PROTECTION SYSTEM DESIGN

This developed software package can be used to make the design of both types for tanks (Internal and External). Fig. 7 shows the flowchart of the developed software program which summarizes the steps that were illustrated in previous sections *A* and *B*.

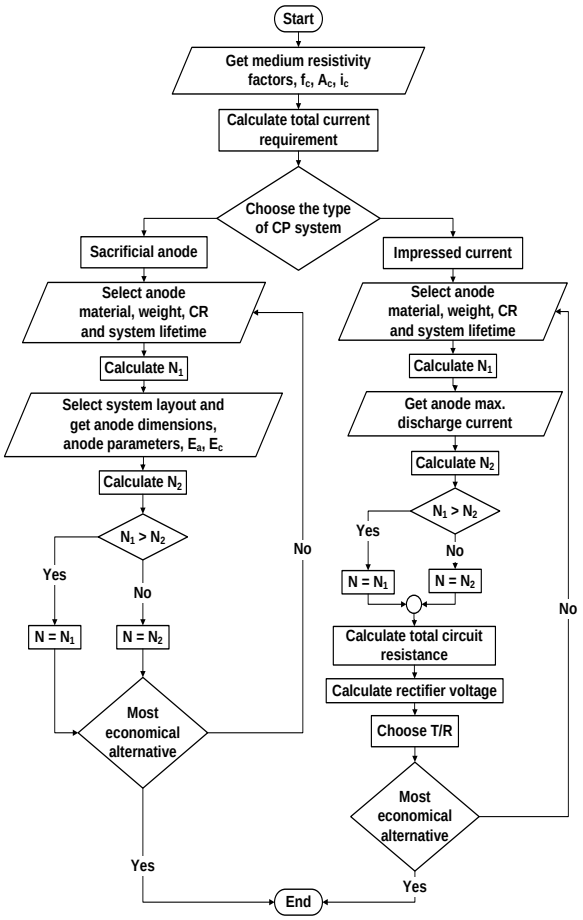

Fig. 7. Flowchart for Tanks Cathodic Protection Program

Fig. 8 shows the Graphical User Interface (GUI) of the tanks CP package of the developed software program, which was developed using MATLAB.

6. CASE STUDY

The selected tank to be studied has the following specifications: Tank Diameter = 19 m, Tank Height = 13.8 m, Maximum Water Level = 12.8 m, Internal Protection Lifetime = 10 years, External Protection Lifetime = 25 years, Internal Coating Breakdown Factor = 15%, External Coating Breakdown Factor = 100% and Working Temperature = 30ºC.

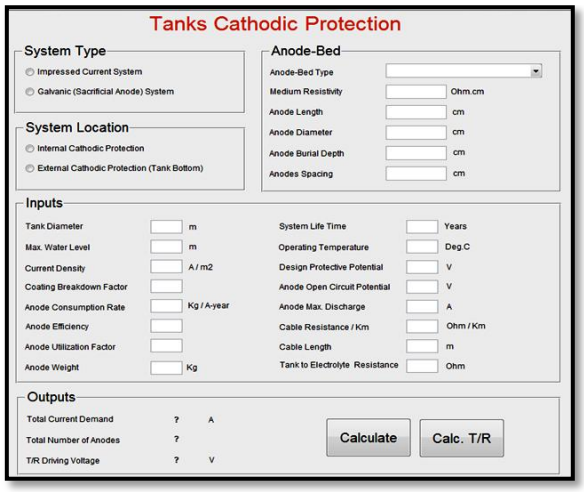

Fig.8. GUI of Tanks Cathodic Protection Software Program

TANK'S INTERNAL CATHODIC PROTECTION

It is recommended to use Aluminum anodes galvalum III of 15 kg. Table (5) shows inputs of this case study, while Table (6) gives a comparison between the program results and the calculated (existing) results. As a computer based calculations; it overcomes the human miscalculations. The difference between the program results and the calculated ones is due to approximations made in hand calculations which are not an issue for the software program, so it gives more accurate results.

TANK'S EXTERNAL CATHODIC PROTECTION

One of the recommended anodes is Si-Fe-Cr anodes of 20 kg (Impressed current cathodic protection solution). Table (7) shows inputs of the external cathodic protection of the tank, while Table (8) gives a comparison between the program results and the calculated (existing) results.

TABLE 5: PROGRAM INPUTS FOR INTERNAL PROTECTION

Inputs	
Tank Diameter (m)	19.0
Max. Water Level (m)	12.8
Current Density (mA / m^2)	20.0
Coating Breakdown Factor	0.15
Anode Consumption Rate (kg / A.year)	3.50
Anode Efficiency	0.95
Anode Utilization Factor	0.85
Anode Weight (kg)	15.0
System Lifetime (year)	10.0
Operating Temperature (^oC)	30.0
Protective Potential (V)	-0.85
Anode Potential (V)	-1.10
Anode-Bed	
Anode-Bed Type	Stand-off
Medium Resistivity (Ω.cm)	1643
Anode Length (cm)	110
Anode Diameter (cm)	30

TABLE 6: COMPARISON BETWEEN SOFTWARE RESULTS AND HAND CALCULATED (EXISTING) RESULTS FOR TANK INTERNAL CATHODIC PROTECTION

	Software Results	**Hand Calculated (Existing) Results**
Total Current Demand (A)	3.1427	3.2
Total Number of Anodes	72	73

TABLE 7: PROGRAM INPUTS FOR EXTERNAL PROTECTION

Inputs	
Tank Diameter (m)	19.0
Current Density (mA / m^2)	15.0
Coating Breakdown Factor	1.00
Anode Consumption Rate (kg / A.year)	0.30
Anode Efficiency	0.70
Anode Utilization Factor	0.85
Anode Weight (kg)	20.0
System Lifetime (year)	25.0
Operating Temperature (^oC)	30.0
Anode Max. Discharge (A)	2.60
Cable Resistance (Ω / km)	3.00
Cable Length (m)	100
Tank to Electrolyte Resistance (Ω)	0.40
Anode-Bed	
Anode-Bed Type	Horizontal
Medium Resistivity (Ω.cm)	869
Anode Length (cm)	152
Anode Diameter (cm)	5
Anode Burial Depth (cm)	90

TABLE 8: COMPARISON BETWEEN SOFTWARE RESULTS AND HAND CALCULATED (EXISTING) RESULTS FOR TANK EXTERNAL CATHODIC PROTECTION

	Software Results	**Hand Calculated (Existing) Results**
Total Current Demand (A)	4.2529	4.26
Total Number of Anodes	3	3

7. CONCLUSION

The software program which was developed using MATLAB for tanks cathodic protection system design is general, accurate and fast, so this software program is effective as it makes the design of any cathodic protection systems for cylindrical tanks easier and it overcomes the miscalculations of humans. All these features of this software program have been proven by applying it to different cases, and all its results were accurate and applicable.

REFERENCES

[1] James B. Bushman, "Corrosion and Cathodic Protection Theory", P.E., Principal Corrosion Engineer Bushman & Associates, Medina, Ohio USA, Copyright 1996 – 2001.

[2] Robert A. Durha, "Corrosion Impact of Cathodic Protection on Surrounding Structures", Petroleum and Chemical Industry Conference, 2003, Record of Conference Papers, IEEE Industry Applications Society 50th Annual, 303:309.

[3] S. M. Bashi, N. F. Mailah and M. A. Mohd Radzi, Member, IEE, "Cathodic Protection System", National Power and Energy Conference (PECon) 2003 Proceedings, 366:370.

[4] Design and Engineering Practice standard (DEP 30.10.73.10-Gen.) "Cathodic Protection", November 2003.

[5] Unified Facilities Criteria (UFC 3-570-02N), "Electrical Engineering Cathodic Protection", Jan 2004.

[6] Pierre R. Roberge, "Hand Book of Corrosion Engineering", McGraw-Hill Companies, 2000.

[7] BS CP 1021:1973, "Code of Practice for Cathodic Protection", 1973

[8] NACE RP-0169:2002, "Recommended Practice for Control of External Corrosion on Underground or Submerged Piping Systems", 2002.

[9] American Petroleum Institute (API recommended practice 651 second edition), "Cathodic Protection of above Ground Petroleum Storage Tanks", December 1997.

[10] NACE RP-0193 – 2001, "External Cathodic protection on On-grade Metallic Storage Tank bottoms", 2001.

[11] NACE RP-0285-85, "Control of External Corrosion on Metallic Buried, Partially Buried or Submerged Liquid storage system", 1985.

[12] DNV-RP-B401, "Recommended Practice for Cathodic Protection Design", October 2010.

[13] BS 7361-1: 1991, "Cathodic protection, Part 1: Code of practice for land and marine applications", 1991.

[14] American Society of Material (ASM international), "Corrosion Fundamentals, Testing and Protection ASM Handbook", 2003.

[15] TM 5-811-7, "Technical Manual Electrical Design, Cathodic Protection", Headquarters Department of the Army, Washington, D.C. April 1985.

بناء برنامج للطلاء الكاثودي لحماية مستوعات التخزين المستخدمة في التطبيقات الصناعية

كريم ناجي ، عبدالله، عباسي

قسم الهندسة الكهربائية، جامعة الإسكندرية، جمهورية مصر العربية

الملخص:

يعتبر التآكل الكيميائي (التحات) واحداً من أخطر المشاكل التي تواجه الصناعات البترولية، و هو المسئول عن العديد من الأعطال الخطيرة التي تؤدي إلى توقف العملية الصناعية؛ مما يؤدي إلى تكاليف عالية في الصيانة. إن توقف العملية الصناعية مكلف جداً من عدة أوجه متمثلة في فواقد الإنتاج و الطاقة المطلوبة لإعادة التشغيل بالإضافة إلى تكلفة المواد المستخدمة. يوجد نوعين من التآكل: تآكل داخلي يؤدي إلى تلوث المنتجات السارية في العملية الإنتاجية، و تآكل خارجي يؤدي إلى تسريبات غير مرغوب فيها من ناحية الأمان و تؤدي إلى مخاطر بيئية.

هناك العديد من طرق الحماية من خطر التآكل، و لكن في هذه الرسالة سوف نقوم بالتركيز على وجهة النظر الكهربية للتآكل و كيفية التعامل معه باستخدام طريقة الحماية الكاثودية (المهبطية)، و هي تقنية مستخدمة للتحكم في تآكل أسطح المعادن عن طريق جعل المعدن المراد حمايته كمهبط لخلية كهروكيميائية.

الموضوع الرئيسي لهذه الورقة البحثية هو دراسة الحماية الكاثودية في التطبيقات النفطية خصوصاً الصهاريج (الخزانات) الفوق أرضية. الهدف من هذه الورقة البحثية هو دراسة نظام الحماية الكاثودية، والاستفادة من البحوث السابقة لعمل برنامج جديد باستخدام برنامج MATLAB لاستخدامه في تصميم أنظمة الحماية الكاثودية المختلفة للخزانات و أهمية هذا البرنامج هو الحصول على نتائج أسرع وأكثر دقة من الحسابات اليدوية، وهذا سيكون مفيدا للتغلب على الخطأ البشري في العمليات الحسابية.